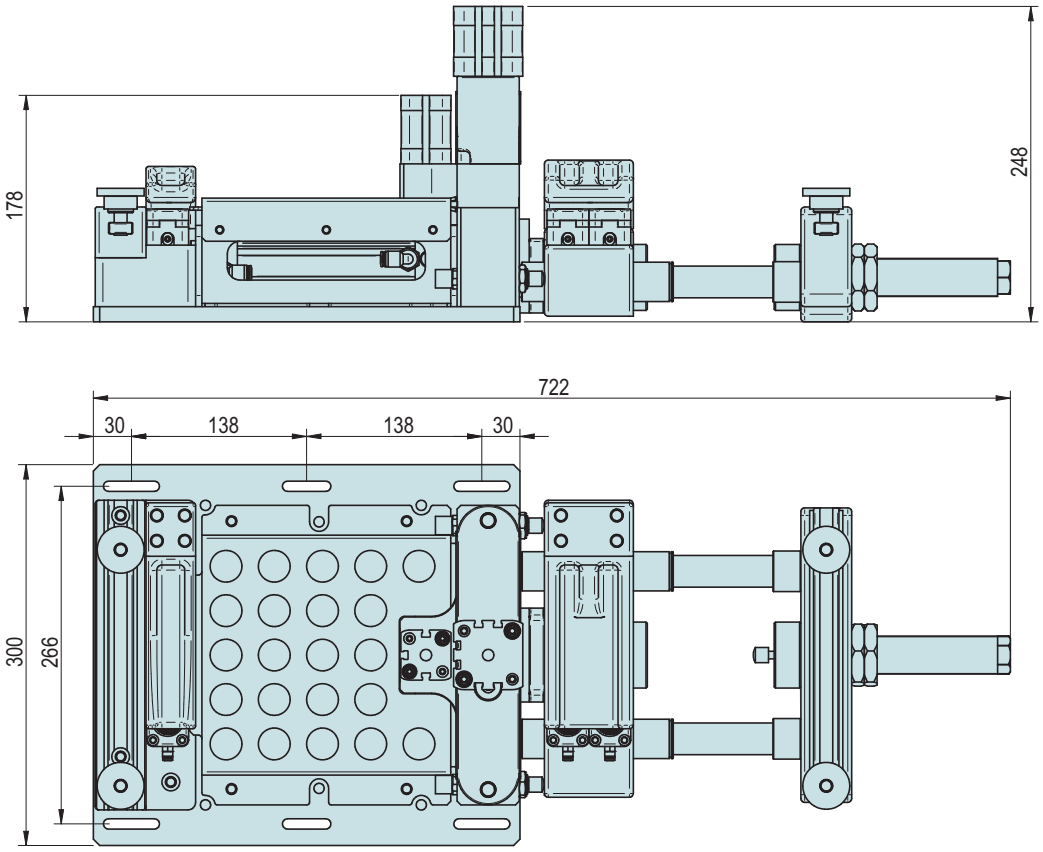

Max. band width	160 mm
Max. machine step	100 mm
Max. band thickness	3 mm
Cylinder thrust	Ø50 mm
Thrust force	118 Kg
Drag clamp force	2 x 110 Kg
Fastening clamp force	110 Kg
Max. air drive pressure	6 Bar
Dimensions	722 x 300 x 248 mm

Options

- ✓ **Thickness control unit**
- ✓ **Dumping movement system**
- ✓ **Solenoid valve control**
- ✓ **Metal band release**
- ✓ **Manual band fastening**

Description

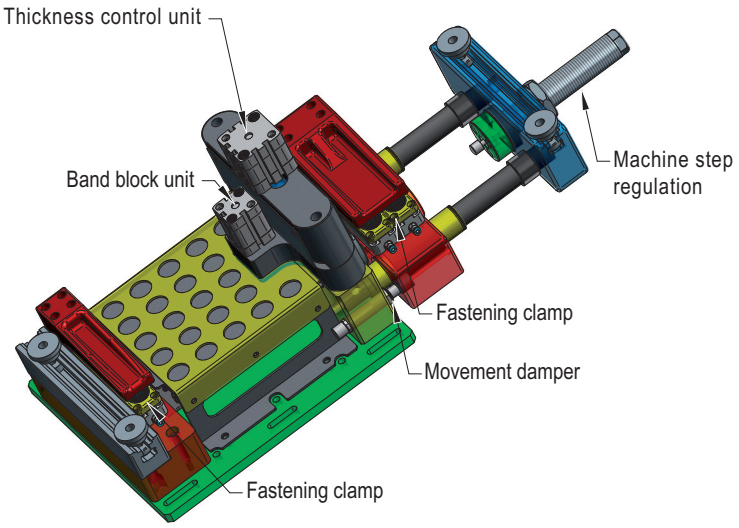

TPGAS 08 07-2019