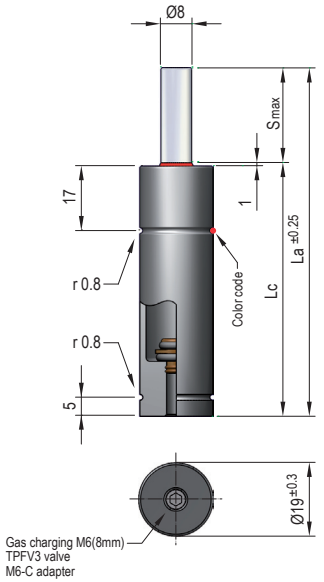

Pressure medium	Gas Nitrógeno (N_2)
Max. charging pressure	175 Bar
Min. charging pressure	25 Bar
Rod seal area	0,50 cm²
Operating temperature	0ºC - 80ºC
Force increase by temperature	0,33 %/ºC
Max. stem speed	1,6 m/s
Maintenance kit	Kit C19

PED 2014/68/UE · ISO ISO 11901 · VDI VDI 3003

VDI SAFETY · RE-8-19

Maximum strokes / minute (at 20ºC)

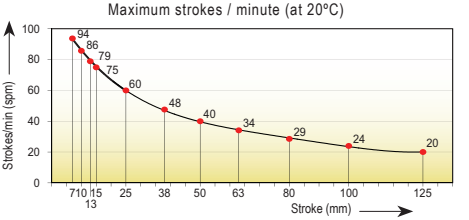

Code	Smax mm	La mm	Lc mm	V l	Kg
TPC 19x7	7	56	49	0,002	0,08
TPC 19x10	10	62	52	0,003	0,08
TPC 19x13	13	67,4	54,4	0,003	0,08
TPC 19x15	15	72	57	0,004	0,09
TPC 19x25	25	92	67	0,006	0,10
TPC 19x38	38	118	80	0,008	0,12
TPC 19x50	50	142	92	0,011	0,13
TPC 19x63A	63	168	105	0,013	0,15
TPC 19x63	63	172	109	0,014	0,15
TPC 19x80A	80	202	122	0,016	0,16
TPC 19x80	80	205	125	0,017	0,17
TPC 19x100	100	245	145	0,021	0,18
TPC 19x125	125	295	170	0,026	0,21

Color code	Fa daN	Fc daN	P Bar
GR *(Green)*	30 (±5%)	≈ 38	60
BL *(Blue)*	50 (±5%)	≈ 65	100
RD *(Red)*	70 (±5%)	≈ 90	140
YW *(Yellow)*	90 (±5%)	≈ 112	175
(Other forces)	13 - 90	≈ 16 - 112	25 - 175

The black color code denotes a different pressure from that which the customer could choose when ordering between the minimum charging pressure (25Bar) and the maximum charging pressure (175Bar). If not otherwise specified, the gas spring will be supplied in the yellow code version.

How to order

TPC 19 x 125 YW

Model · Stroke · Color code

Force/stroke ratio

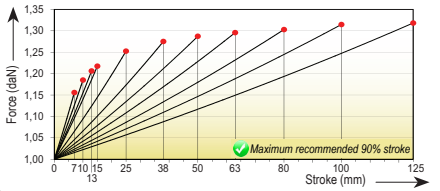

Initial force/charging pressure ratio

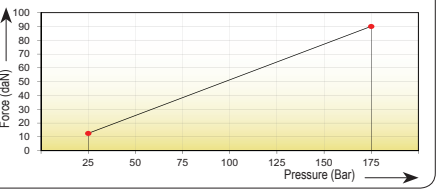

Assembly possibilities

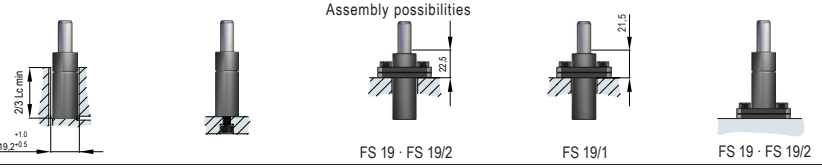

FS 19 · FS 19/2 · FS 19/1 · FS 19 · FS 19/2

TPGAS 07 01-2018