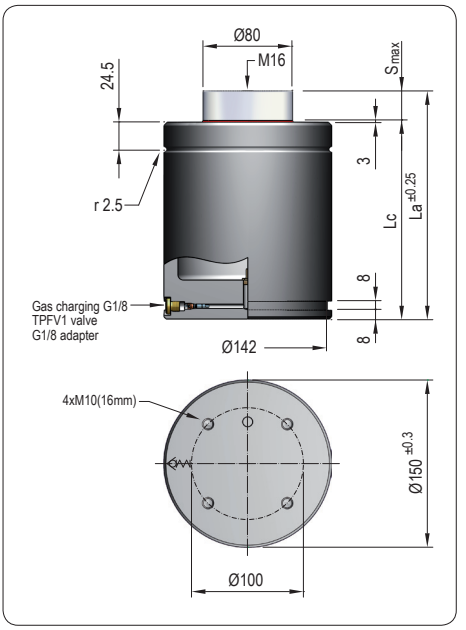

Pressure medium	Gas Nitrógeno (N_2)
Max. charging pressure	150 Bar
Min. charging pressure	35 Bar
Rod seal area	50,27 cm²
Operating temperature	0ºC - 80ºC
Force increase by temperature	0,33 %/ºC
Max. stem speed	1,6 m/s
Maintenance kit	Kit S7500

PED 2014/68/UE · ISO 11901 · VDI 3003 · CNOMO E.24.54.815.G

Maximum strokes / minute (at 20ºC)

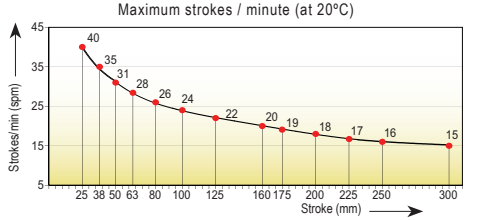

Code	Smax mm	La mm	Lc mm	Fa daN	90% F daN	100% Fc daN	P Bar	V l	Kg
TPS 7500x25	25	205	180	7500 ±5% (20ºC)	9935	10295	150 (20ºC)	0,469	19,50
TPS 7500x38	38	231	193		10375	10830		0,629	20,60
TPS 7500x50	50	255	205		10640	11150		0,776	21,50
TPS 7500x63	63	282	219		10845	11400		0,936	22,30
TPS 7500x80	80	315	235		11030	11625		1,144	23,70
TPS 7500x100	100	355	255		11180	11815		1,390	25,40
TPS 7500x125	125	405	280		11310	11975		1,697	27,00
TPS 7500x160	160	475	315		11430	12130		2,126	30,60
TPS 7500x175	175	505	330		11470	12175		2,310	31,40
TPS 7500x200	200	555	355		11525	12245		2,617	37,40
TPS 7500x225	225	605	380		11565	12295		2,924	35,60
TPS 7500x250	250	655	405		11600	12340		3,230	37,40
TPS 7500x300	300	755	455		11655	12405		3,844	40,10

Force/stroke ratio

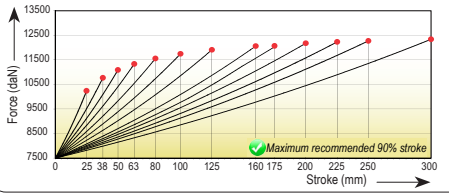

Initial force/charging pressure ratio

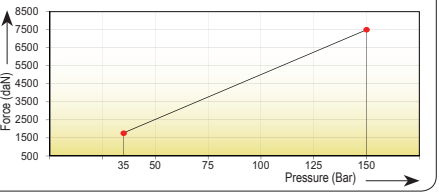

Assembly possibilities

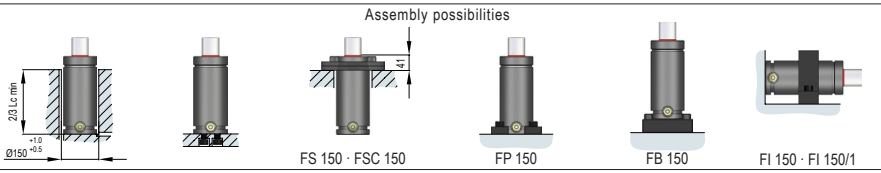

TPGAS 07 01-2018