Cylinders with slow-speed return TPSRC 3000

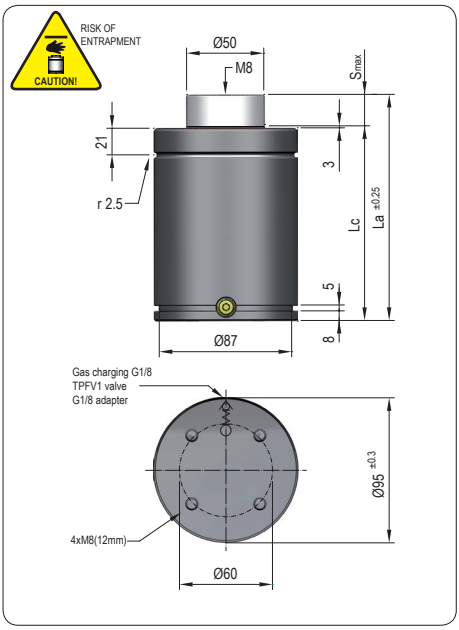

Pressure medium	Gas Nitrógeno (N_2)
Max. charging pressure	150 Bar
Min. charging pressure	35 Bar
Rod seal area	19,63 cm²
Operating temperature	0ºC - 80ºC
Force increase by temperature	0,33 %/ºC
Max. stem speed	20 m/min
Maintenance kit	Kit SR3000
Recommended max. strokes/min	2 - 8 spm

PED 2014/68/UE — ISO STANDARD DIMENSIONS

VDI SAFETY — RE-50-80

Required data

Working stroke	*(mm)*
Press speed	*(m/min)*
Maximum press rate	*(spm)*
Gas spring expansion speed	*(m/min)*

Code	Smax mm	La mm	Lc mm	Fa daN	90% F daN	100% Fc daN	P Bar	V l	Kg
TPSRC 3000x160	160	440	280		4410	4665		0,852	9,24
TPSRC 3000x200	200	520	320	3000 ±5%	4270	4495	150	1,138	10,31
TPSRC 3000x250	250	620	370	(20ºC)	4320	4555	(20ºC)	1,390	11,90
TPSRC 3000x300	300	720	420		4350	4595		1,641	14,87

(Other strokes under order)

Force/stroke ratio

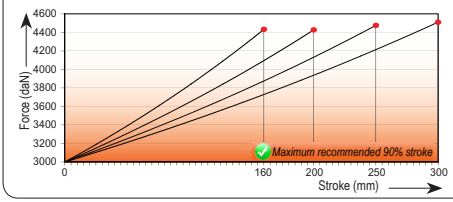

Initial force/charging pressure ratio

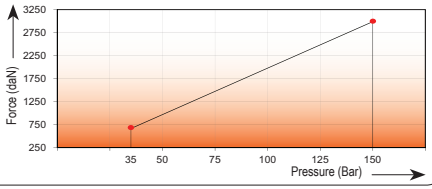
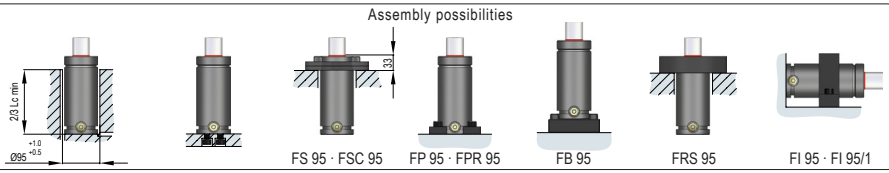
Assembly possibilities