PED 2014/68/UE

ISO

VDI

ISO POWER

ISO gas springs

Code	ØBody mm	Strokes mm	Fa daN		ACTIVE SAFETY			ISO STANDARD
TPSP 300.1	32	10 - 125	300	√	√		√	
TPSP 500.1	38	10 - 125	470	√	√	√	√	
TPSP 750	45	13 - 160	740	√	√	√	√	
TPSP 1000.1	50	13 - 300	920	√	√	√	√	
TPSP 1500	63	13 - 160	1500	√	√	√	√	
TPSP 2400	75	25 - 300	2400	√	√	√	√	√
TPSP 4200	95	25 - 300	4200	√	√	√	√	√
TPSP 6600	120	25 - 300	6600	√	√	√	√	√
TPSP 9500	150	25 - 300	9500	√	√	√	√	√
TPSP 20000	195	25 - 200	20000	√	√	√		

ISO POWER

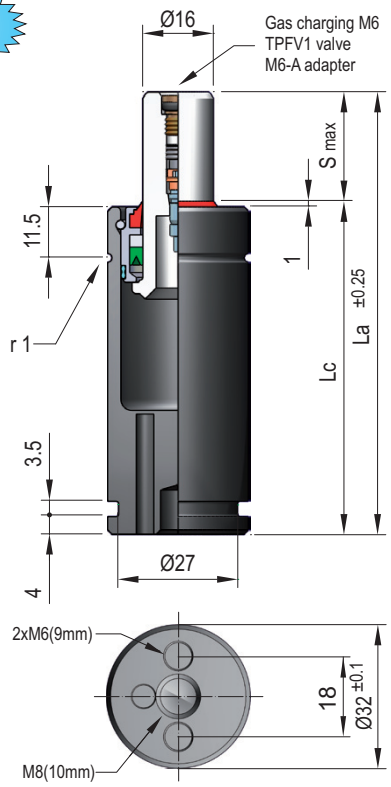

Pressure medium	Gas Nitrógeno (N_2)
Max. charging pressure	150 Bar
Min. charging pressure	25 Bar
Rod seal area	2,01 cm²
Operating temperature	0ºC - 80ºC
Force increase by temperature	0,33 %/ºC
Max. stem speed	1,6 m/s
Maintenance kit	Kit SP300.1

PED 2014/68/UE

VDI SAFETY

RE-16-32

Maximum strokes / minute (at 20ºC)

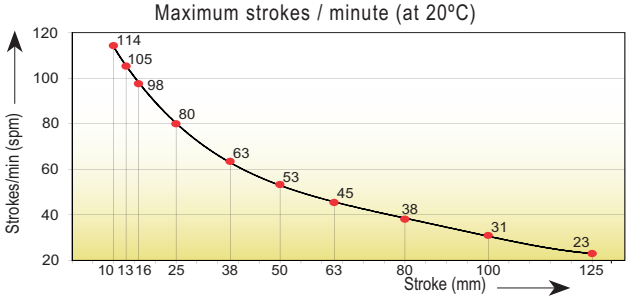

Code	Smax mm	La mm	Lc mm	Fa daN	90% F daN	100% Fc daN	P Bar	V l	Kg
TPSP 300x10.1	10	70	60	300 ±5% (20ºC)	430	450	150 (20ºC)	0,006	0,31
TPSP 300x13.1	13	75,4	62,7		425	445		0,008	0,33
TPSP 300x16.1	16	82	66		430	450		0,010	0,34
TPSP 300x25.1	25	100	75		430	450		0,015	0,38
TPSP 300x38.1	38	126	88		430	450		0,023	0,43
TPSP 300x50.1	50	150	100		430	450		0,030	0,48
TPSP 300x63.1	63	176	113		430	450		0,038	0,53
TPSP 300x80.1	80	210	130		430	450		0,049	0,61
TPSP 300x100.1	100	250	150		430	450		0,061	0,77
TPSP 300x125.1	125	300	175		430	450		0,076	0,89

Force/stroke ratio

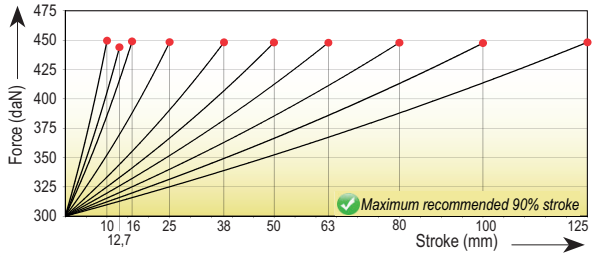

Initial force/charging pressure ratio

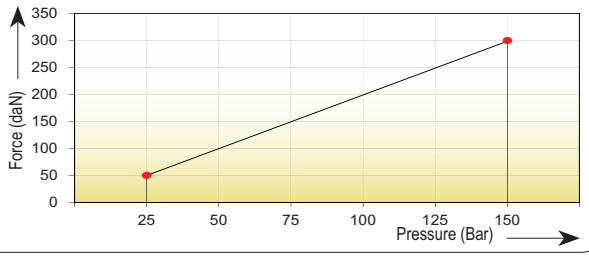

Assembly possibilities

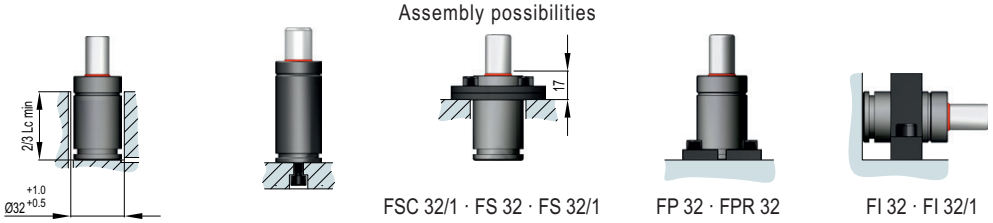

FSC 32/1 · FS 32 · FS 32/1 FP 32 · FPR 32 FI 32 · FI 32/1

TPGAS 07 01-2018

TPSP 500.1

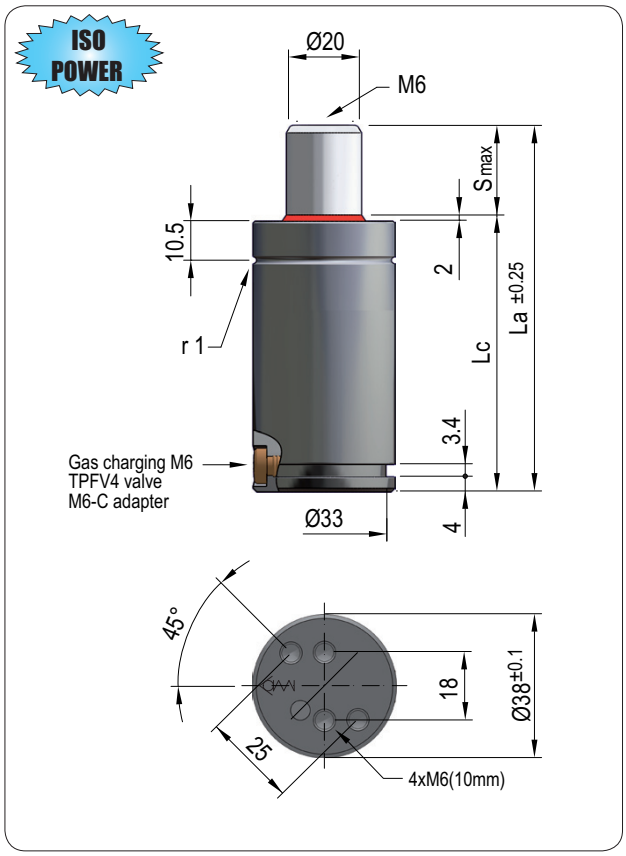

Pressure medium	Gas Nitrógeno (N_2)
Max. charging pressure	150 Bar
Min. charging pressure	35 Bar
Rod seal area	3,14 cm²
Operating temperature	0ºC - 80ºC
Force increase by temperature	0,33 %/ºC
Max. stem speed	1,6 m/s
Maintenance kit	Kit SP500.1

PED 2014/68/UE

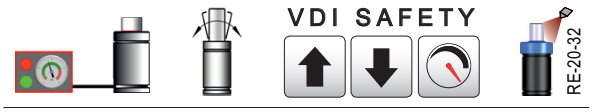

Maximum strokes / minute (at 20ºC)

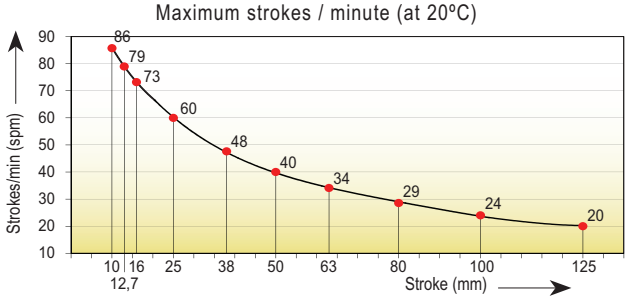

Code	Smax mm	La mm	Lc mm	Fa daN	90% F daN	100% Fc daN	P Bar	V l	Kg
TPSP 500x10.1	10	70	60		545	555		0,021	0,43
TPSP 500x13.1	12,7	75,4	62,7		565	575		0,022	0,44
TPSP 500x16.1	16	82	66		570	585		0,026	0,46
TPSP 500x25.1	25	100	75		590	610		0,035	0,51
TPSP 500x38.1	38	126	88	470 ±5%	610	635	150	0,047	0,59
TPSP 500x50.1	50	150	100	(20ºC)	625	645	(20ºC)	0,058	0,66
TPSP 500x63.1	63	177	114		630	655		0,070	0,73
TPSP 500x80.1	80	210	130		640	665		0,086	0,83
TPSP 500x100.1	100	250	150		645	675		0,105	0,96
TPSP 500x125.1	125	300	175		650	680		0,128	1,05

Force/stroke ratio

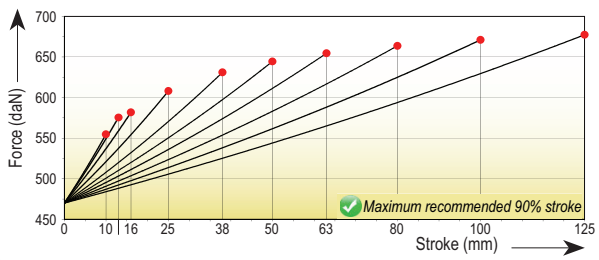

Initial force/charging pressure ratio

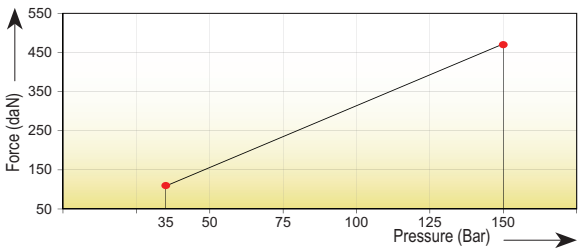

Assembly possibilities

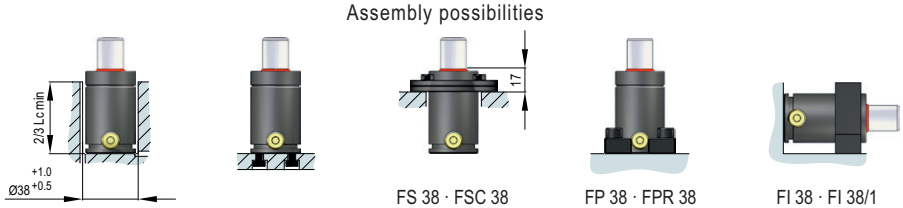

FS 38 · FSC 38 FP 38 · FPR 38 FI 38 · FI 38/1

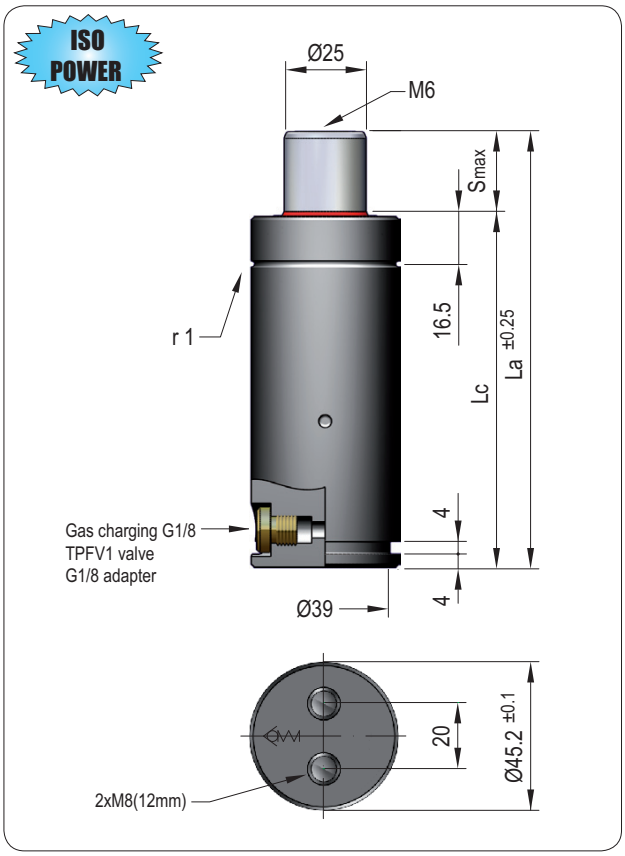

Pressure medium	Gas Nitrógeno (N_2)
Max. charging pressure	150 Bar
Min. charging pressure	35 Bar
Rod seal area	3,14 cm²
Operating temperature	0ºC - 80ºC
Force increase by temperature	0,33 %/ºC
Max. stem speed	1,6 m/s
Maintenance kit	Kit SP750

PED 2014/68/UE

Maximum strokes / minute (at 20ºC)

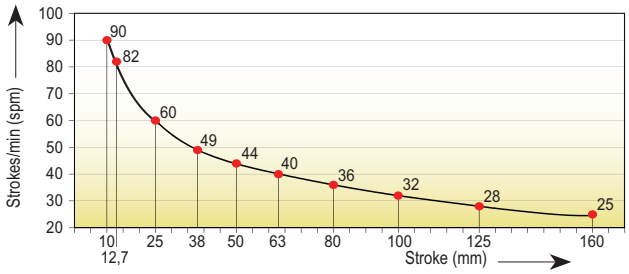

Code	Smax mm	La mm	Lc mm	Fa daN	90% F daN	100% Fc daN	P Bar	V l	Kg
TPSP 750x13	12,7	110,4	97,7	740 ±5% (20ºC)	1105	1170	150 (20ºC)	0,017	0,90
TPSP 750x25	25	135	110		1145	1220		0,031	0,98
TPSP 750x38	38	161	123		1155	1235		0,047	1,02
TPSP 750x50	50	185	135		1160	1240		0,061	1,15
TPSP 750x63	63	212	149		1165	1245		0,077	1,24
TPSP 750x80	80	245	165		1170	1250		0,097	1,35
TPSP 750x100	100	285	185		1170	1250		0,121	1,60
TPSP 750x125	125	335	210		1170	1255		0,150	1,70
TPSP 750x160	160	405	245		1305	1425		0,163	2,20

Force/stroke ratio

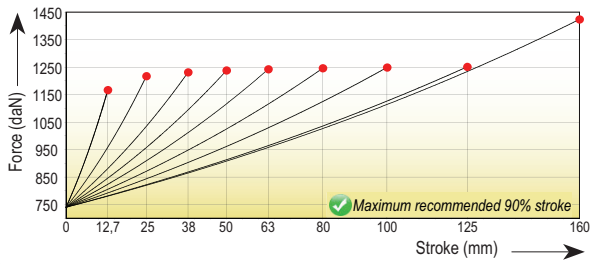

Initial force/charging pressure ratio

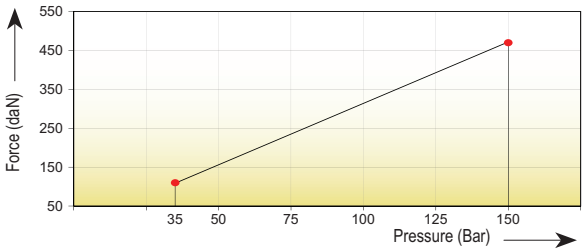

Assembly possibilities

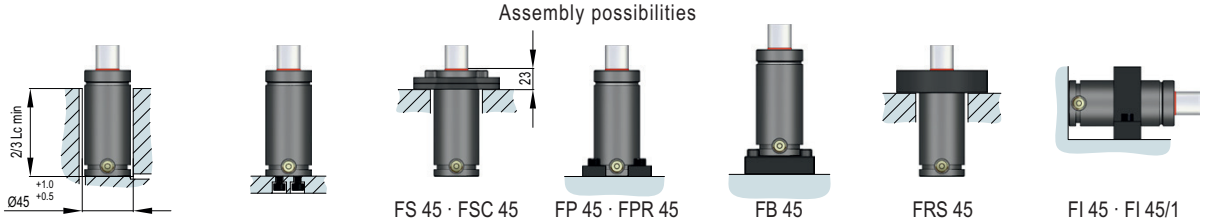

TPGAS 07 01-2018

TPSP 1000.1

Ø50mm
1000daN

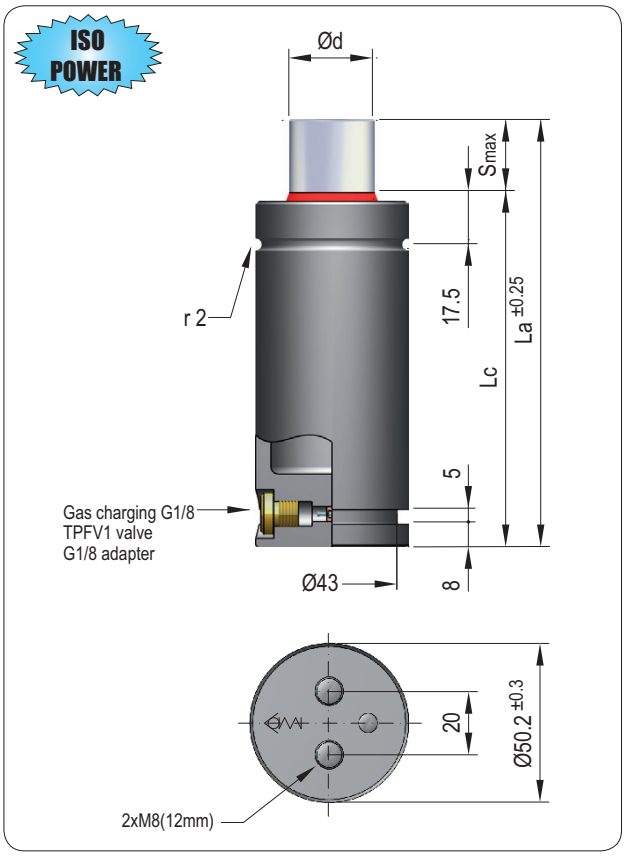

Pressure medium	Gas Nitrógeno (N_2)
Max. charging pressure	150 Bar
Min. charging pressure	35 Bar
Rod seal area	Ø28mm - 6,16 cm² Ø30mm - 7,07 cm²
Operating temperature	0ºC - 80ºC
Force increase by temperature	0,33 %/ºC
Max. stem speed	1,2 m/s
Maintenance kit	Ø28mm-Kit SP1000/28 Ø30mm-Kit SP1000/30

PED 2014/68/UE · ISO 11901 · VDI 3003

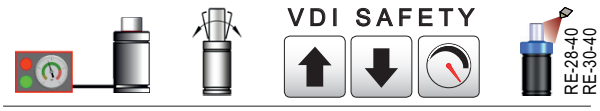

Maximum strokes / minute (at 20ºC)

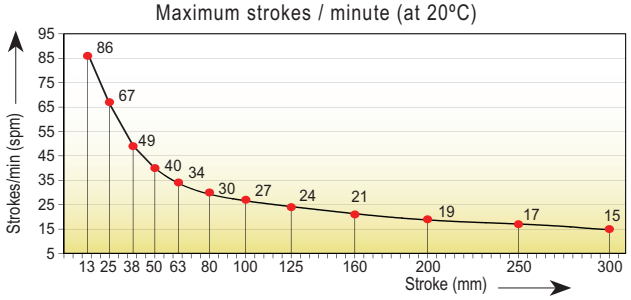

Code	Smax mm	La mm	Lc mm	d mm	Fa daN	90% F daN	100% Fc daN	P Bar	V l	Kg
TPSP 1000x13.1	13	120,4	107,7	28		1120	1145		0,040	1,25
TPSP 1000x25.1	25	145	120	28		1220	1260		0,057	1,40
TPSP 1000x38.1	38	171	133	28		1270	1325		0,077	1,45
TPSP 1000x50.1	50	195	145	28	920 ±5%	1300	1360		0,096	1,57
TPSP 1000x63.1	63	222	159	28	(20ºC)	1320	1390		0,116	1,75
TPSP 1000x80.1	80	255	175	28		1340	1415	150	0,142	1,87
TPSP 1000x100.1	100	295	195	28		1360	1435	(20ºC)	0,173	1,90
TPSP 1000x125.1	125	345	220	28		1375	1450		0,211	2,25
TPSP 1000x160.1	160	415	255	30		1940	2140		0,224	2,35
TPSP 1000x200.1	200	495	295	30	1060 ±5%	1975	2185		0,275	2,50
TPSP 1000x250.1	250	595	345	30	(20ºC)	2005	2225		0,337	3,25
TPSP 1000x300.1	300	695	395	30		2025	2255		0,400	3,95

Force/stroke ratio

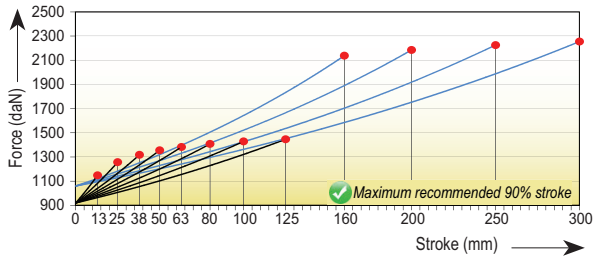

Initial force/charging pressure ratio

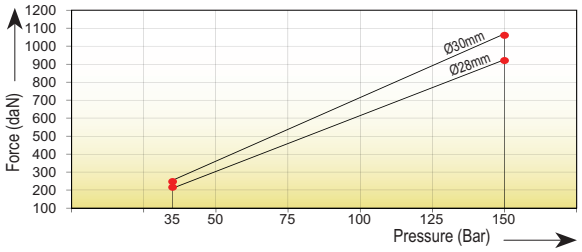

Assembly possibilities

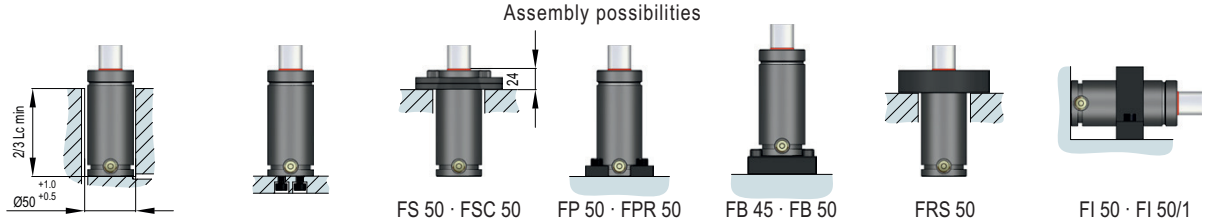

TPGAS 07 01-2018

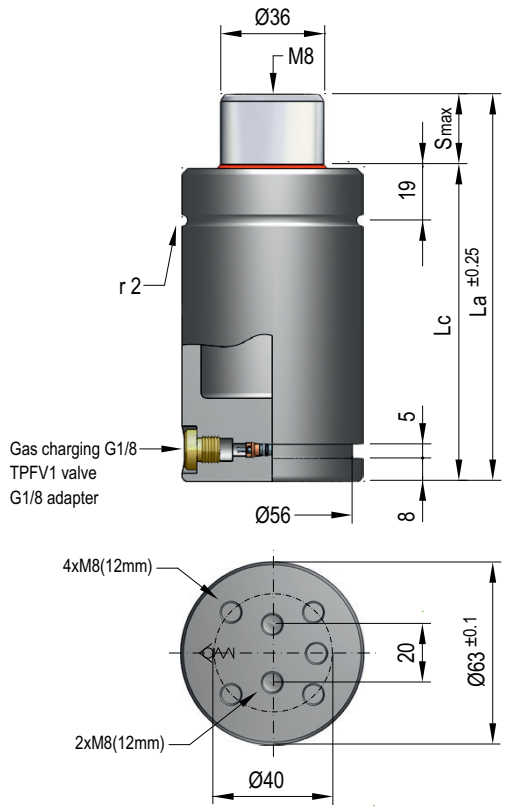

Pressure medium	Gas Nitrógeno (N_2)
Max. charging pressure	150 Bar
Min. charging pressure	35 Bar
Rod seal area	10,18 cm²
Operating temperature	0ºC - 80ºC
Force increase by temperature	0,33 %/ºC
Max. stem speed	1,6 m/s
Maintenance kit	Kit SP1500

PED 2014/68/UE

Maximum strokes / minute (at 20ºC)

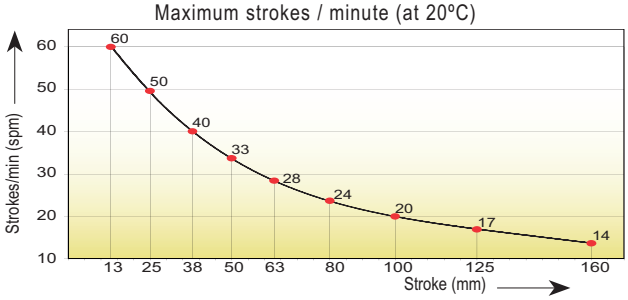

Code	Smax mm	La mm	Lc mm	Fa daN	90% F daN	100% Fc daN	P Bar	V l	Kg
TPSP 1500x13	13	121	108	1500 ±5% (20ºC)	1660	1680	148 (20ºC)	0,126	1,96
TPSP 1500x25	25	145	120		1765	1800		0,156	2,20
TPSP 1500x38	38	171	133		1850	1895		0,188	2,36
TPSP 1500x50	50	195	145		1910	1965		0,217	2,44
TPSP 1500x63	63	221	158		1960	2030		0,249	2,55
TPSP 1500x80	80	255	175		2015	2090		0,291	2,61
TPSP 1500x100	100	295	195		2060	2150		0,340	3,25
TPSP 1500x125	125	345	220		2110	2205		0,401	4,06
TPSP 1500x160	160	415	255		2390	2555		0,397	5,23

Force/stroke ratio

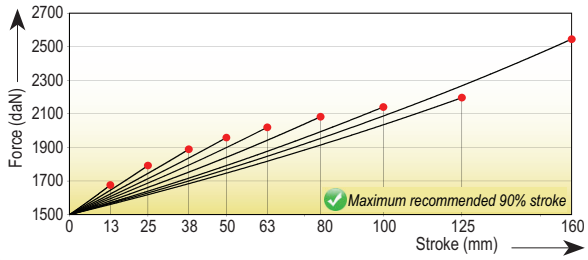

Initial force/charging pressure ratio

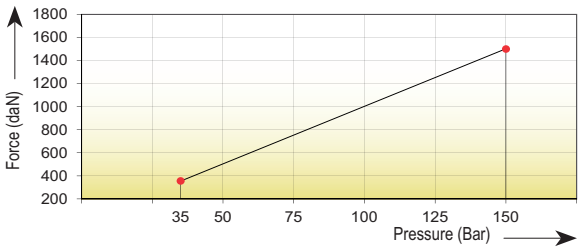

Assembly possibilities

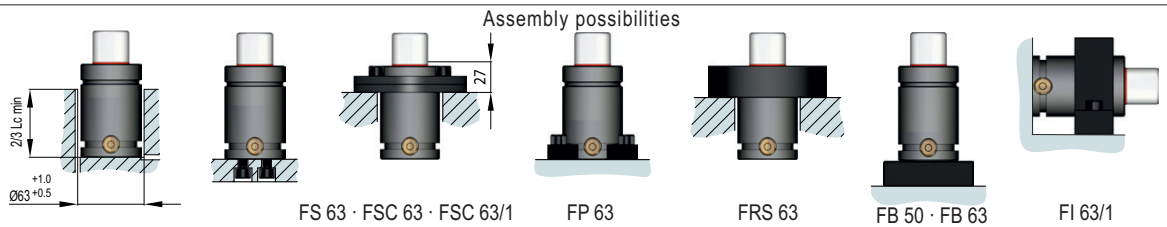

TPGAS 07 01-2018

TECAPRES®

Ø75mm
2400daN

TPSP 2400

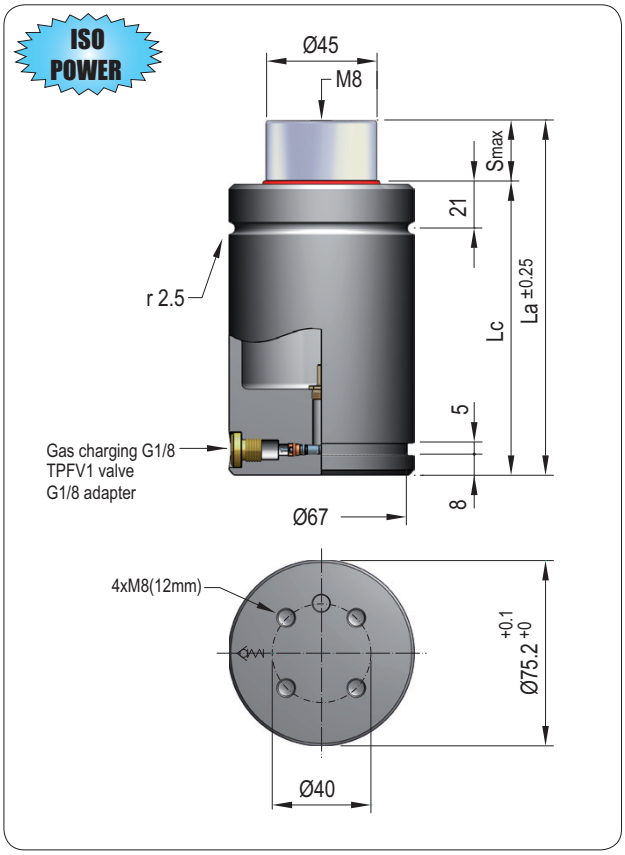

Pressure medium	Gas Nitrógeno (N_2)
Max. charging pressure	150 Bar
Min. charging pressure	35 Bar
Rod seal area	15,90 cm²
Operating temperature	0ºC - 80ºC
Force increase by temperature	0,33 %/ºC
Max. stem speed	1,6 m/s
Maintenance kit	Kit SP2400

PED 2014/68/UE · ISO ISO 11901 · VDI VDI 3003

VDI SAFETY · RE-45-63

Maximum strokes / minute (at 20ºC)

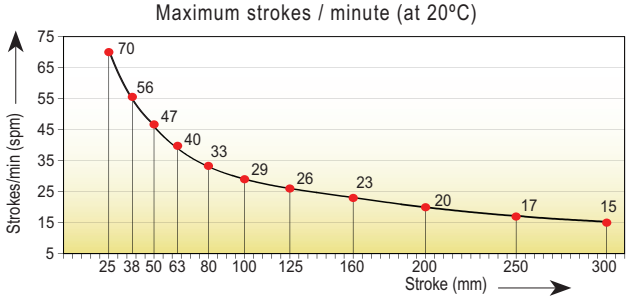

Code	Smax mm	La mm	Lc mm	Fa daN	90% F daN	100% Fc daN	P Bar	V l	Kg
TPSP 2400x25	25	160	135	2400 ±5% (20ºC)	2810	2865	150 (20ºC)	0,238	3,50
TPSP 2400x38	38	186	148		2940	3015		0,289	3,70
TPSP 2400x50	50	210	160		3030	3125		0,336	3,85
TPSP 2400x63	63	237	174		3120	3230		0,384	4,10
TPSP 2400x80	80	270	190		3200	3325		0,451	4,65
TPSP 2400x100	100	310	210		3270	3410		0,529	5,00
TPSP 2400x125	125	360	235		3290	3430		0,652	5,56
TPSP 2400x160	160	430	270		3700	3940		0,645	6,24
TPSP 2400x200	200	510	310		3800	4070		0,769	7,36
TPSP 2400x250	250	610	360		3890	4185		0,925	8,12
TPSP 2400x300	300	710	410		3960	4270		1,081	9,05

Force/stroke ratio

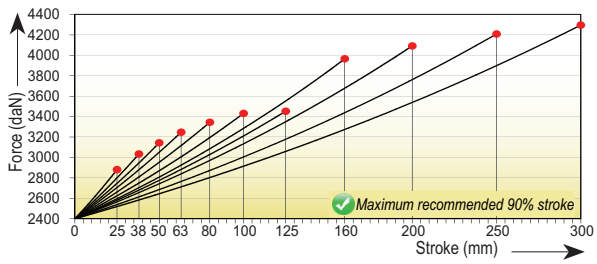

Initial force/charging pressure ratio

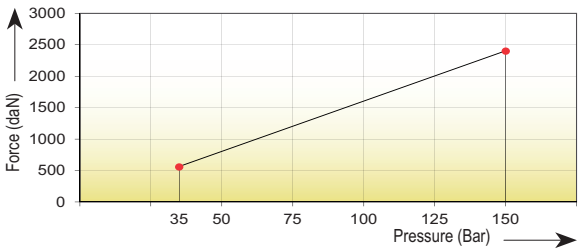

Assembly possibilities

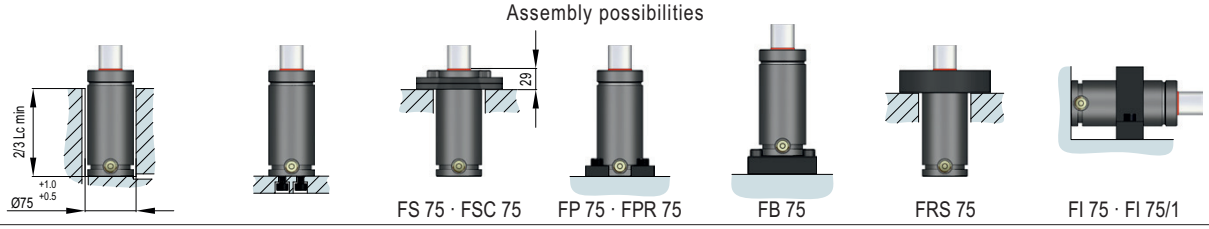

TPGAS 07 01-2018

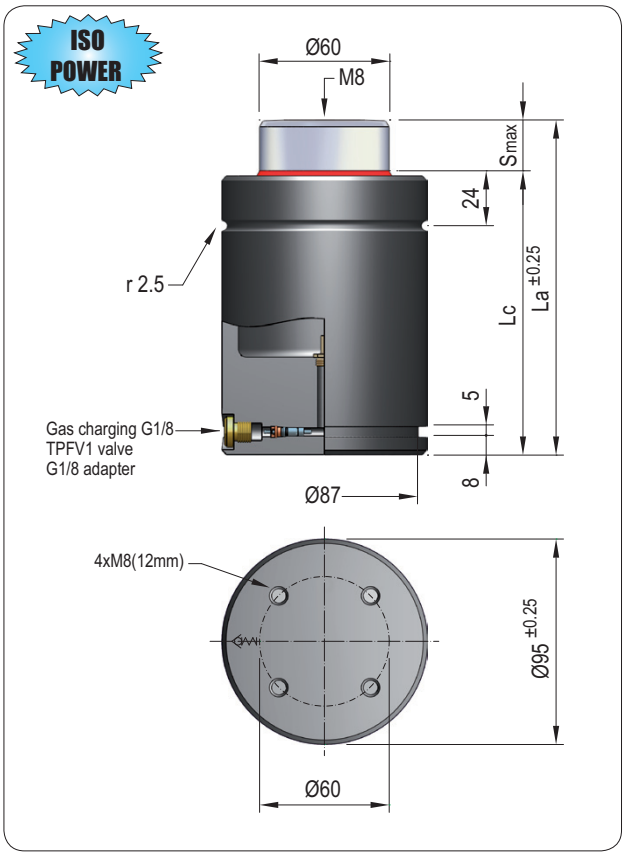

Pressure medium	Gas Nitrógeno (N_2)
Max. charging pressure	150 Bar
Min. charging pressure	35 Bar
Rod seal area	28,27 cm²
Operating temperature	0ºC - 80ºC
Force increase by temperature	0,33 %/ºC
Max. stem speed	1,6 m/s
Maintenance kit	Kit SP4200

PED 2014/68/UE · ISO 11901 · VDI 3003

Maximum strokes / minute (at 20ºC)

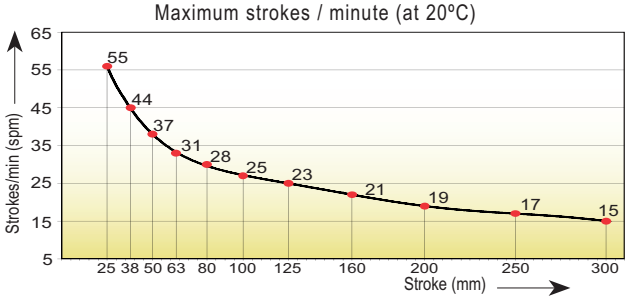

Code	Smax mm	La mm	Lc mm	Fa daN	90% F daN	100% Fc daN	P Bar	V l	Kg
TPSP 4200x25	25	170	145	4200 ±5% (20ºC)	5010	5115	150 (20ºC)	0,413	6,25
TPSP 4200x38	38	196	158		5260	5400		0,500	6,75
TPSP 4200x50	50	220	170		5450	5630		0,574	7,05
TPSP 4200x63	63	247	184		5590	5795		0,664	7,54
TPSP 4200x80	80	280	200		5765	6005		0,770	8,04
TPSP 4200x100	100	320	220		5900	6165		0,906	9,05
TPSP 4200x125	125	370	245		5970	6250		1,099	9,87
TPSP 4200x160	160	440	280		6750	7225		1,096	10,75
TPSP 4200x200	200	520	320		6815	7310		1,347	11,84
TPSP 4200x250	250	620	370		6875	7380		1,661	13,21
TPSP 4200x300	300	720	420		6910	7435		1,975	16,43

Force/stroke ratio

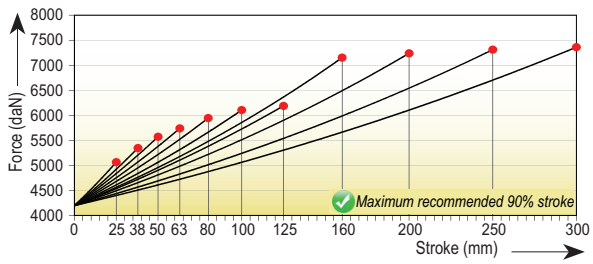

Initial force/charging pressure ratio

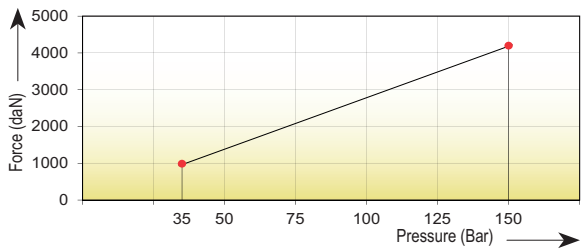

Assembly possibilities

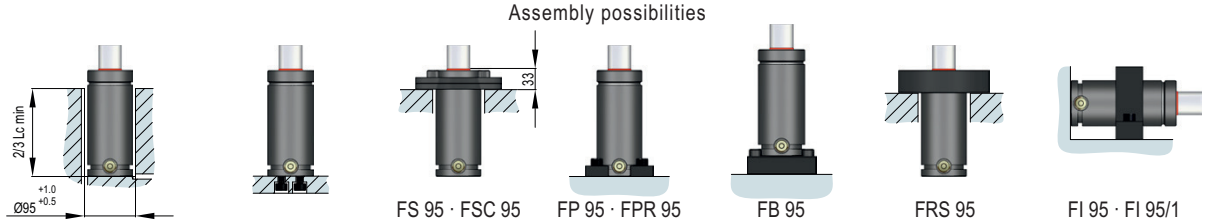

TPGAS 07 01-2018

TPSP 6600

Ø120mm
6600daN

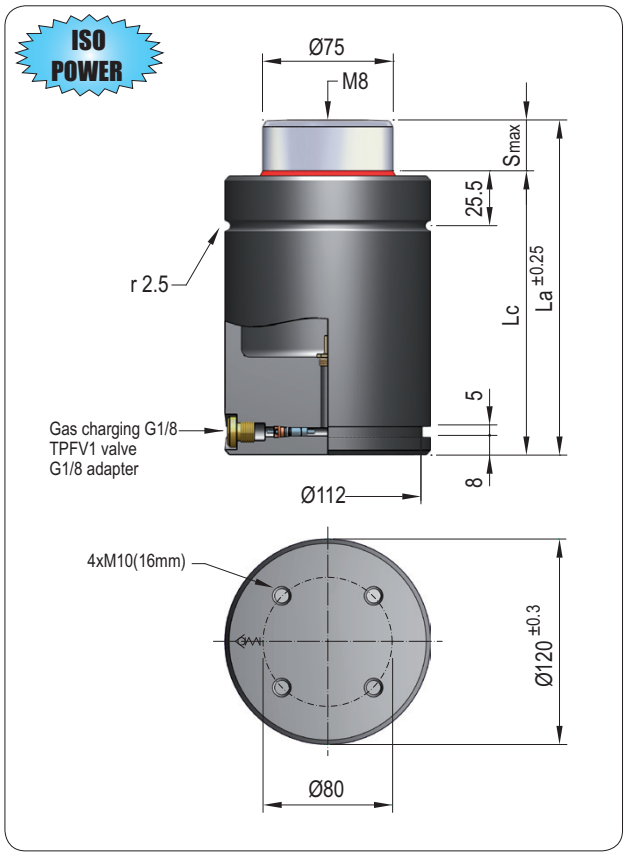

Pressure medium	Gas Nitrógeno (N_2)
Max. charging pressure	150 Bar
Min. charging pressure	35 Bar
Rod seal area	44,18 cm²
Operating temperature	0ºC - 80ºC
Force increase by temperature	0,33 %/ºC
Max. stem speed	1,6 m/s
Maintenance kit	Kit SP6600

PED 2014/68/UE · ISO 11901 · VDI 3003

VDI SAFETY · RE-75-100

Maximum strokes / minute (at 20ºC)

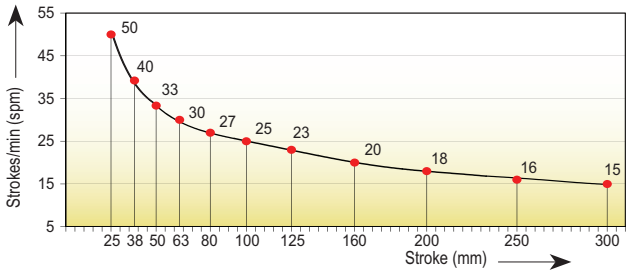

Code	Smax mm	La mm	Lc mm	Fa daN	90% F daN	100% Fc daN	P Bar	V l	Kg
TPSP 6600x25	25	190	165	6600 ±5% (20ºC)	7620	7755	147 (20ºC)	0,730	12,47
TPSP 6600x38	38	216	178		7980	8170		0,863	13,75
TPSP 6600x50	50	240	190		8245	8485		0,986	14,09
TPSP 6600x63	63	267	204		8480	8760		1,119	15,34
TPSP 6600x80	80	300	220		8730	9060		1,293	16,15
TPSP 6600x100	100	340	240		8965	9340		1,497	17,08
TPSP 6600x125	125	390	265		9185	9610		1,753	18,95
TPSP 6600x160	160	460	300		10495	11240		1,706	20,58
TPSP 6600x200	200	540	340		10165	10818		2,257	22,46
TPSP 6600x250	250	640	390		10270	10950		2,769	25,13
TPSP 6600x300	300	740	440		10345	11045		3,280	27,87

Force/stroke ratio

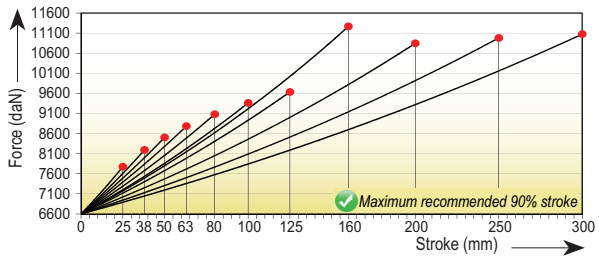

Initial force/charging pressure ratio

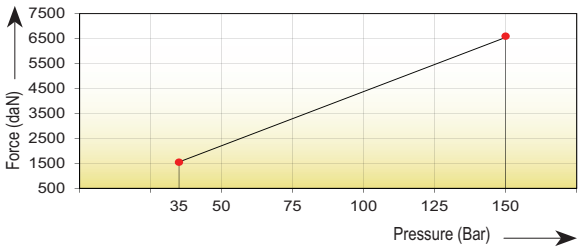

Assembly possibilities

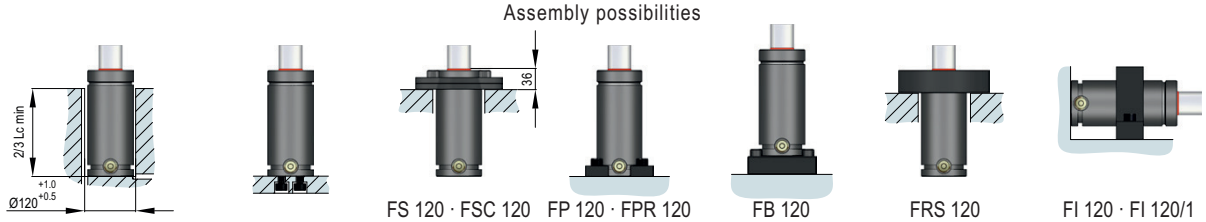

TPGAS 07 01-2018

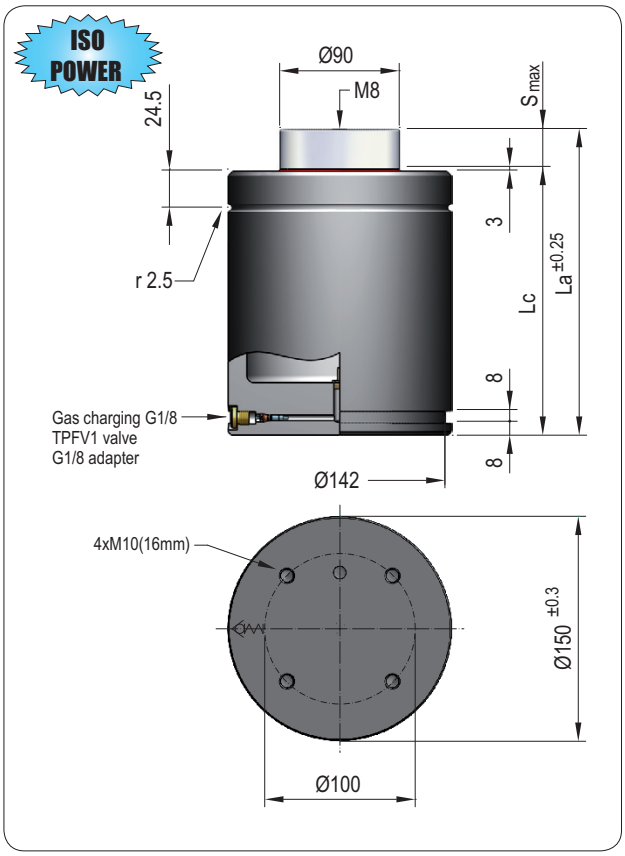

Pressure medium	Gas Nitrógeno (N_2)
Max. charging pressure	150 Bar
Min. charging pressure	35 Bar
Rod seal area	63,62 cm²
Operating temperature	0ºC - 80ºC
Force increase by temperature	0,33 %/ºC
Max. stem speed	1,6 m/s
Maintenance kit	Kit SP9500

PED 2014/68/UE · ISO 11901 · VDI 3003

Maximum strokes / minute (at 20ºC)

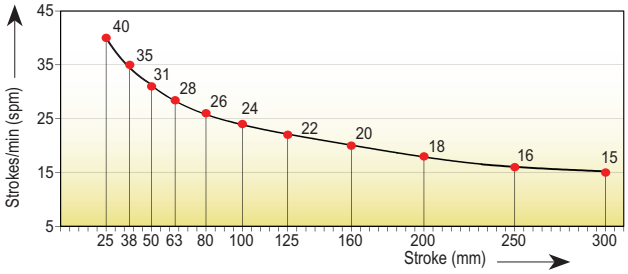

Code	Smax mm	La mm	Lc mm	Fa daN	90% F daN	100% Fc daN	P Bar	V l	Kg
TPSP 9500x25	25	205	180	9500 ±5% (20ºC)	11765	12075	150 (20ºC)	0,758	20,61
TPSP 9500x38	38	231	193		12360	12780		0,954	21,72
TPSP 9500x50	50	255	205		12760	13255		1,135	22,62
TPSP 9500x63	63	282	219		13090	13650		1,332	23,93
TPSP 9500x80	80	315	235		13410	14040		1,588	25,84
TPSP 9500x100	100	355	255		13690	14385		1,890	27,55
TPSP 9500x125	125	405	280		13945	14695		2,268	29,15
TPSP 9500x160	160	475	315		15100	16145		2,490	32,78
TPSP 9500x200	200	555	355		15150	16210		3,093	34,00
TPSP 9500x250	250	655	405		15195	16265		3,848	40,62
TPSP 9500x300	300	755	455		15225	16300		4,603	43,33

Force/stroke ratio

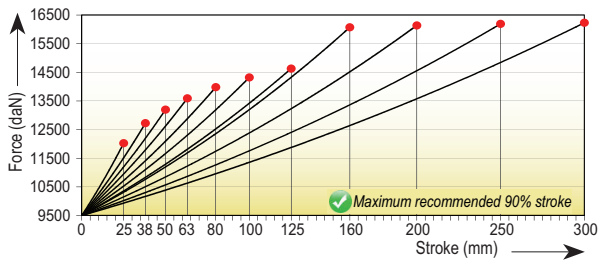

Initial force/charging pressure ratio

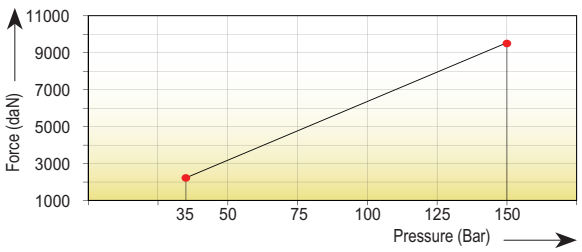

Assembly possibilities

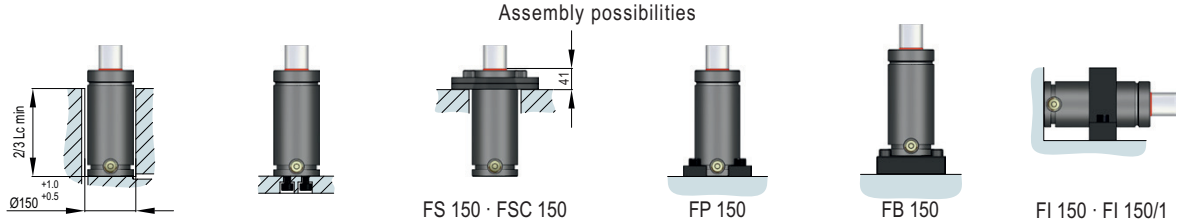

FS 150 · FSC 150 · FP 150 · FB 150 · FI 150 · FI 150/1

TPGAS 07 01-2018

TPSP 20000

Ø195mm
20000daN

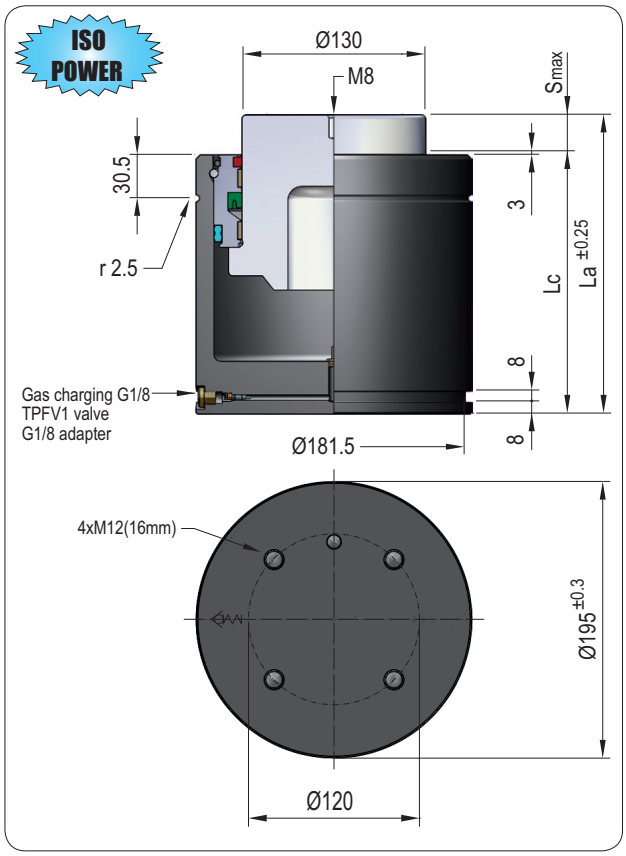

Pressure medium	Gas Nitrógeno (N_2)
Max. charging pressure	150 Bar
Min. charging pressure	35 Bar
Rod seal area	132,73 cm^2
Operating temperature	0ºC - 80ºC
Force increase by temperature	0,33 %/ºC
Max. stem speed	1 m/s
Maintenance kit	Kit SP20000

PED 2014/68/UE

VDI SAFETY

Maximum strokes / minute (at 20ºC)

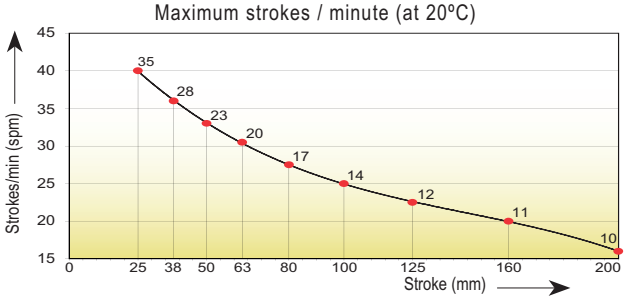

Code	Smax mm	La mm	Lc mm	Fa daN	90% F daN	100% Fc daN	P Bar	V l	Kg
TPSP 20000x25	25	210	185	20000 ±5% (20ºC)	26865	27950	150 (20ºC)	1,154	31,8
TPSP 20000x38	38	236	198		27990	29310		1,573	32,3
TPSP 20000x50	50	260	210		29165	30755		1,882	34,25
TPSP 20000x63	63	286	223		30140	31965		2,217	35,37
TPSP 20000x80	80	320	240		31105	33175		2,655	38,09
TPSP 20000x100	100	360	260		31945	34245		3,171	39,15
TPSP 20000x125	125	410	285		32710	35230		3,816	42,75
TPSP 20000x160	160	480	320		39105	43795		3,894	45,91
TPSP 20000x200	200	560	360		39670	44585		4,797	51,33

(Other strokes under order)

Force/stroke ratio

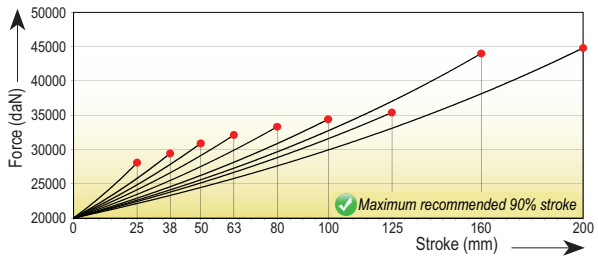

Initial force/charging pressure ratio

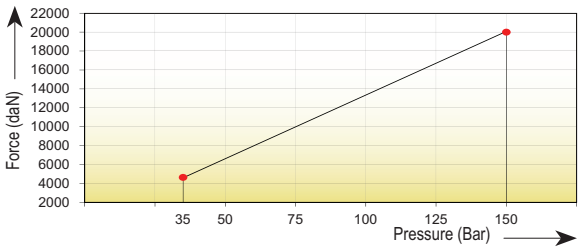

Assembly possibilities

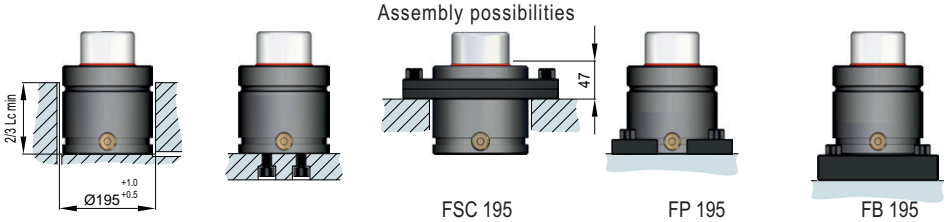

TPGAS 07 01-2018