TECAPRES®

Ø150mm
11800daN

MICRO 150H

VDI SAFETY

PED 2014/68/UE — VDI POWER

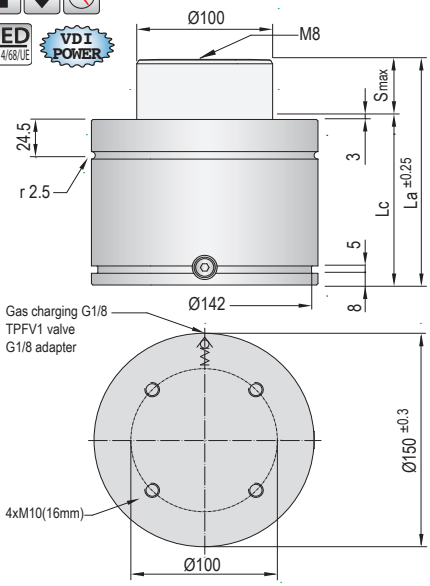

Pressure medium	Nitrogen (N_2)
Max. charging pressure	150 Bar
Min. charging pressure	35 Bar
Rod seal area	78,54 cm^2
Operating temperature	0ºC - 80ºC
Force increase by temperature	0,33 %/ºC
Max. stem speed	1,6 m/s
Maintenance kit	Kit M150H

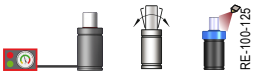

Maximum strokes / minute (at 20ºC)

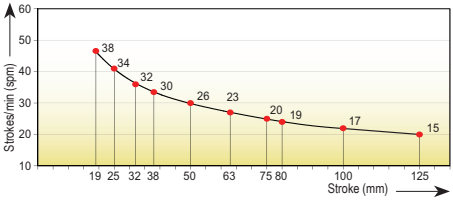

Code	Smax mm	La mm	Lc mm	Fa daN	90% F daN	100% Fc daN	P Bar	V l	Kg
MICRO 150Hx19	19	116	97		17895	18990		0,393	9,70
MICRO 150Hx25	25	128	103		18430	19660		0,490	9,95
MICRO 150Hx32	32	142	110		18860	20210		0,603	10,60
MICRO 150Hx38	38	154	116		19125	20550		0,699	10,95
MICRO 150Hx50	50	178	128	11800 ±5%	19500	21030	150	0,893	11,55
MICRO 150Hx63	63	204	141	(20ºC)	19765	21375	(20ºC)	1,102	12,15
MICRO 150Hx75	75	228	153		19935	21600		1,296	12,55
MICRO 150Hx80	80	238	158		19995	21675		1,376	13,80
MICRO 150Hx100	100	278	178		20175	21910		1,699	14,90
MICRO 150Hx125	125	328	203		20325	22105		2,102	16,05

Force/stroke ratio

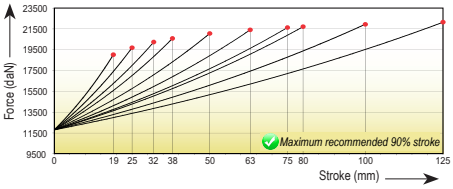

Initial force/charging pressure ratio

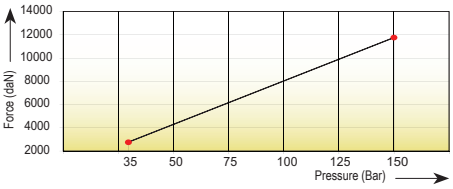

Assembly possibilities

Follow guidelines Page 287

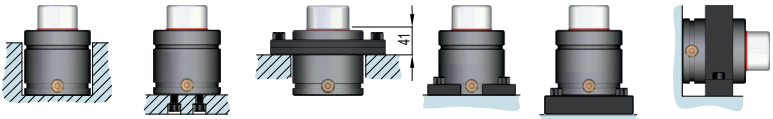

DROP-IN | SCREWS | FS 150·FSC 150 | FP 150·FPR 150 | FB 150 | FI 150·FI 150/1