TPHT 38

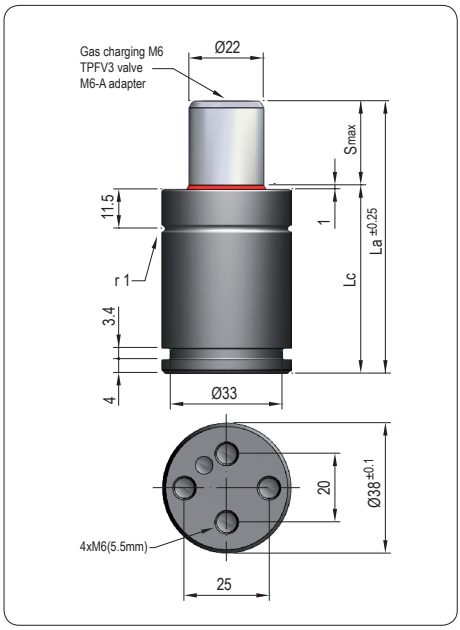

Pressure medium	Gas Nitrógeno (N_2)
Max. charging pressure	80 Bar
Min. charging pressure	35 Bar
Rod seal area	3,80 cm²
Operating temperature	0ºC - 120ºC
Force increase by temperature	0,33 %/ºC
Max. stem speed	0,5 m/s
Maintenance kit	Kit HT38
Max. strokes / min	10 - 20 spm
Life service	300.000 ÷ 500.000 strokes

PED 2014/68/UE

Up to 120ºC

VDI SAFETY

FOR HIGH Temperature Up to 120ºC

Designed to work up to a maximum of 120ºC, the TPHT series is especially recommendable for application where the temperature exceeds standard operating temperature

Code	Smax mm	La mm	Lc mm	Fa daN	90% F daN	100% Fc daN	P Bar	V l	Kg
TPHT 38x10	10	50	40	300 ±5% (20ºC)	455	480	80 (20ºC)	0,010	0,26
TPHT 38x12	12	54	42		465	495		0,012	0,27
TPHT 38x16	16	62	46		465	495		0,016	0,28
TPHT 38x19	19	68	49		465	495		0,019	0,30
TPHT 38x25	25	80	55		465	495		0,025	0,33
TPHT 38x32	32	94	62		465	495		0,032	0,35
TPHT 38x38	38	106	68		465	495		0,037	0,39
TPHT 38x50	50	130	80		465	495		0,049	0,43
TPHT 38x63	63	156	93		465	495		0,062	0,48
TPHT 38x75	75	180	105		465	495		0,074	0,51
TPHT 38x80	80	190	110		465	495		0,079	0,55

Force/stroke ratio

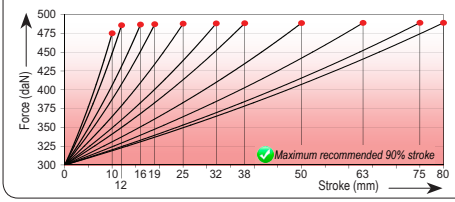

Initial force/charging pressure ratio

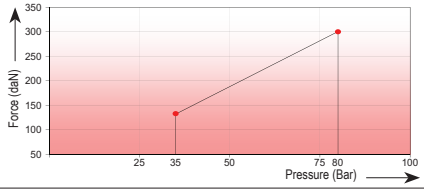

Assembly possibilities

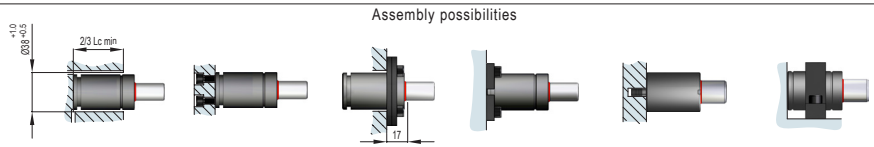

FS 38 · FSC 38 | FP 38 · FPR 38 | TPHT 38R | FI 38 · FI 38/1