TPSP 500.1

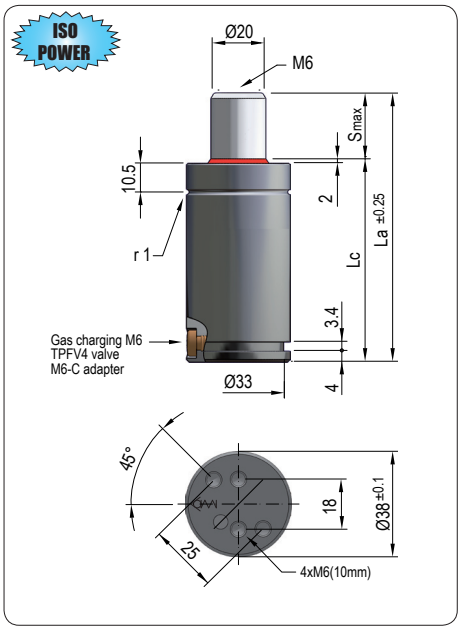

Pressure medium	Gas Nitrógeno (N_2)
Max. charging pressure	150 Bar
Min. charging pressure	35 Bar
Rod seal area	3,14 cm²
Operating temperature	0ºC - 80ºC
Force increase by temperature	0,33 %/ºC
Max. stem speed	1,6 m/s
Maintenance kit	Kit SP500.1

PED 2014/68/UE

Maximum strokes / minute (at 20°C)

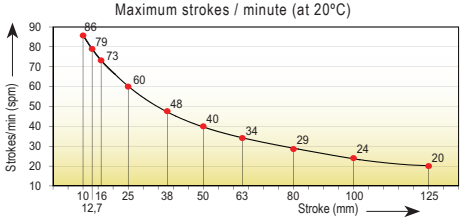

Code	Smax mm	La mm	Lc mm	Fa daN	90% F daN	100% Fc daN	P Bar	V l	Kg
TPSP 500x10.1	10	70	60		545	555		0,021	0,43
TPSP 500x13.1	12,7	75,4	62,7		565	575		0,022	0,44
TPSP 500x16.1	16	82	66		570	585		0,026	0,46
TPSP 500x25.1	25	100	75		590	610		0,035	0,51
TPSP 500x38.1	38	126	88	470 ±5%	610	635	150	0,047	0,59
TPSP 500x50.1	50	150	100	(20ºC)	625	645	(20ºC)	0,058	0,66
TPSP 500x63.1	63	177	114		630	655		0,070	0,73
TPSP 500x80.1	80	210	130		640	665		0,086	0,83
TPSP 500x100.1	100	250	150		645	675		0,105	0,96
TPSP 500x125.1	125	300	175		650	680		0,128	1,05

Force/stroke ratio

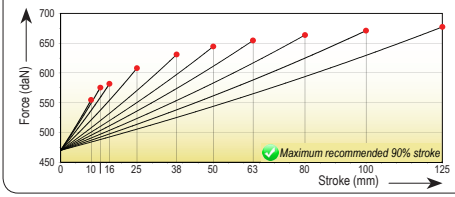

Initial force/charging pressure ratio

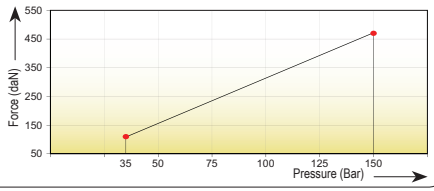
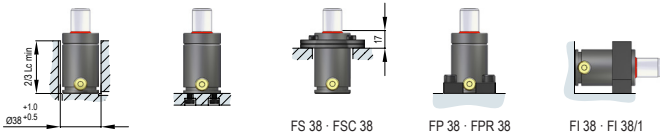
Assembly possibilities