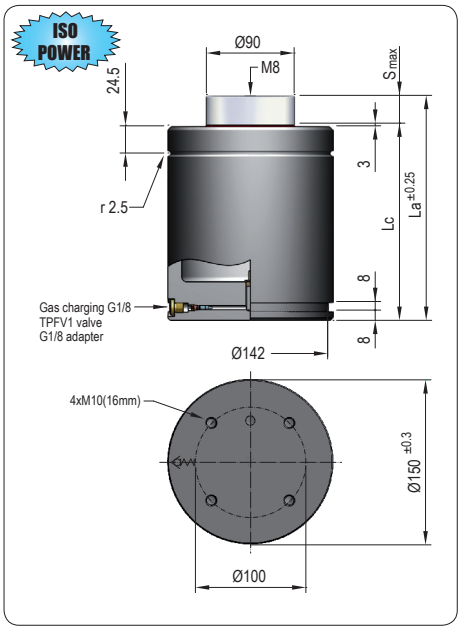

Pressure medium	Gas Nitrógeno (N_2)
Max. charging pressure	150 Bar
Min. charging pressure	35 Bar
Rod seal area	63,62 cm²
Operating temperature	0ºC - 80ºC
Force increase by temperature	0,33 %/ºC
Max. stem speed	1,6 m/s
Maintenance kit	Kit SP9500

PED 2014/68/UE · ISO 11901 · VDI 3003

Maximum strokes / minute (at 20ºC)

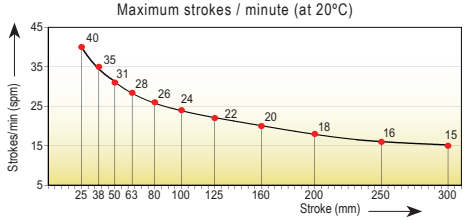

Code	Smax mm	La mm	Lc mm	Fa daN	90% F daN	100% Fc daN	P Bar	V l	Kg
TPSP 9500x25	25	205	180	9500 ±5% (20ºC)	11765	12075	150 (20ºC)	0,758	20,61
TPSP 9500x38	38	231	193		12360	12780		0,954	21,72
TPSP 9500x50	50	255	205		12760	13255		1,135	22,62
TPSP 9500x63	63	282	219		13090	13650		1,332	23,93
TPSP 9500x80	80	315	235		13410	14040		1,588	25,84
TPSP 9500x100	100	355	255		13690	14385		1,890	27,55
TPSP 9500x125	125	405	280		13945	14695		2,268	29,15
TPSP 9500x160	160	475	315		15100	16145		2,490	32,78
TPSP 9500x200	200	555	355		15150	16210		3,093	34,00
TPSP 9500x250	250	655	405		15195	16265		3,848	40,62
TPSP 9500x300	300	755	455		15225	16300		4,603	43,33

Force/stroke ratio

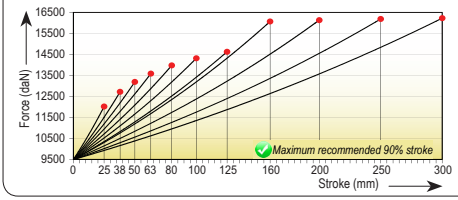

Initial force/charging pressure ratio

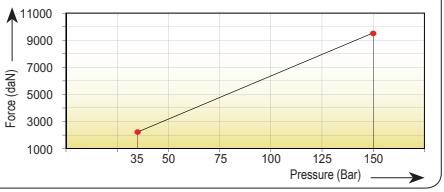

Assembly possibilities

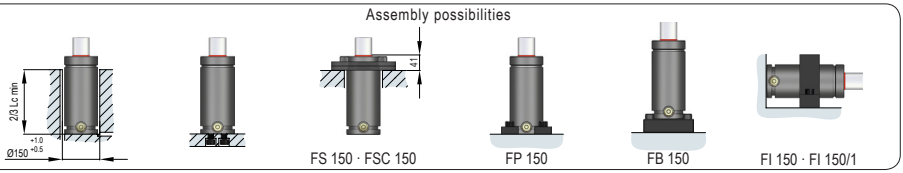

TPGAS 07 01-2018