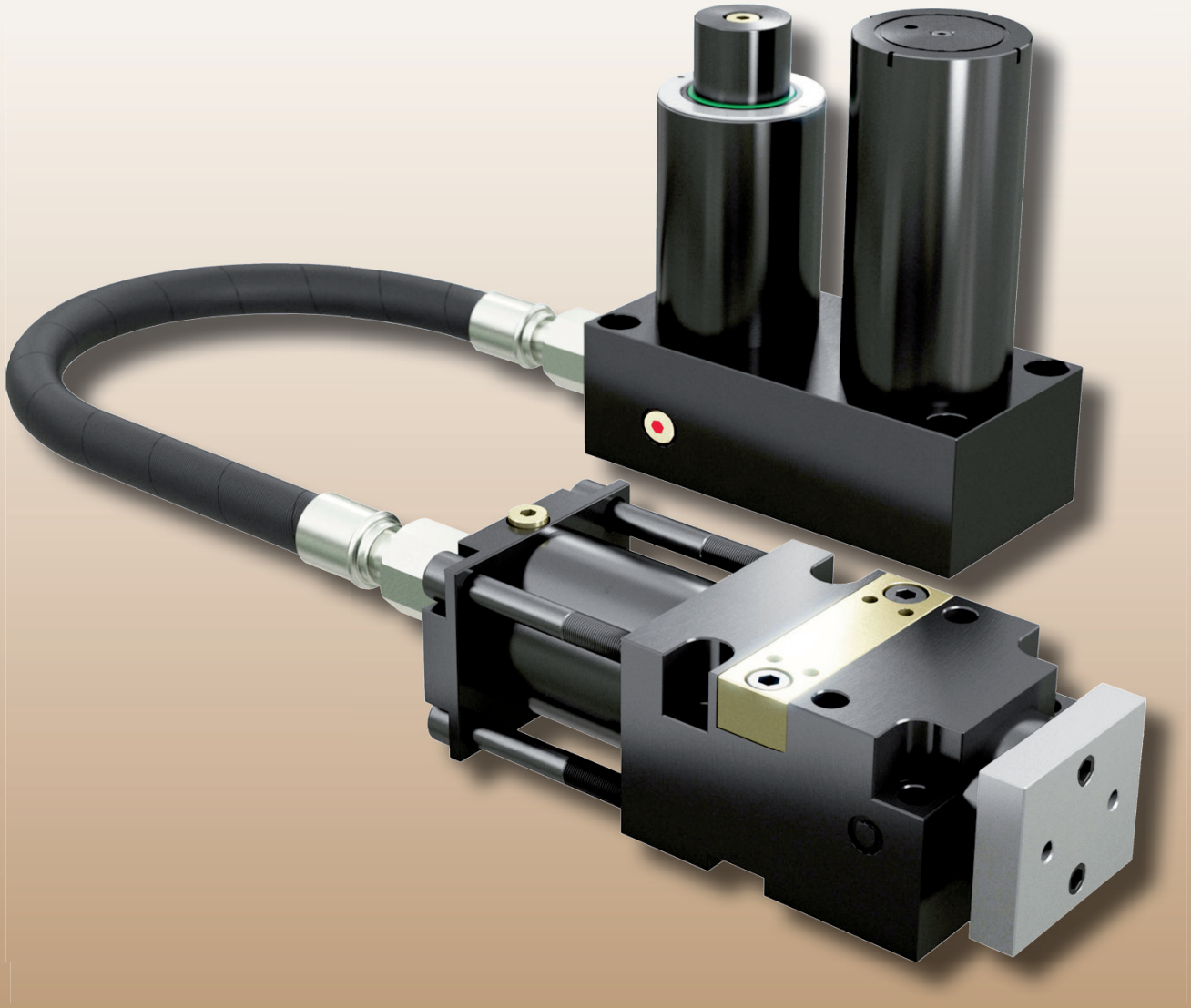

Hydraulic cams

Code	Working punch stroke mm	Max. punching force daN
TPCH 3000	25, 50, 80	3000
TPCH 7500	25, 50, 80	7500
TPCH 12000	25, 50, 63	12000

Description

Hydraulic cams can freely operate in any position and at any angle in space for stamping, folding, punching operations, etc.. thanks to the flexible distribution of forces.

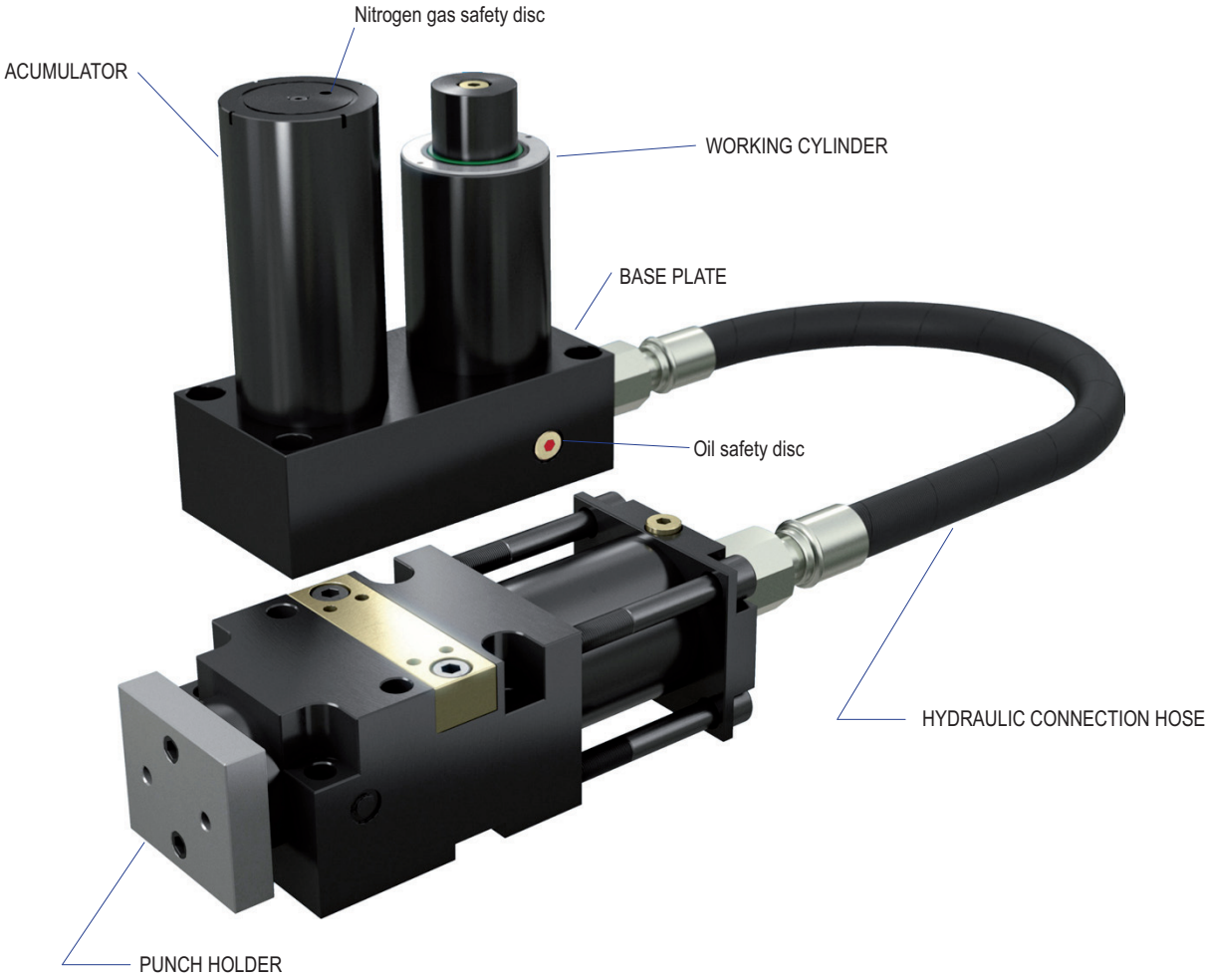

DRIVE UNIT

The drive unit supplies the working pressure by means of oil. It consists of the following elements:

- Working cylinder
- Pressure accumulator
- Manifold plate

The accumulator is capable of absorbing all the volume displaced by the working cylinder if the cam stroke is blocked.

WORKING CAM

The working cam is controlled through the drive unit. It has a gas spring that produces the recoil force.

It is suitable for working applications with both round punches and punches with other shapes, thanks to its anti-turning device.

HYDRAULIC CONNECTION HOSE

There is a high pressure hose that connects the drive unit with the working cam. Fittings with O-rings are used to guarantee a perfect fix of the elements to avoid leaking.

Operation

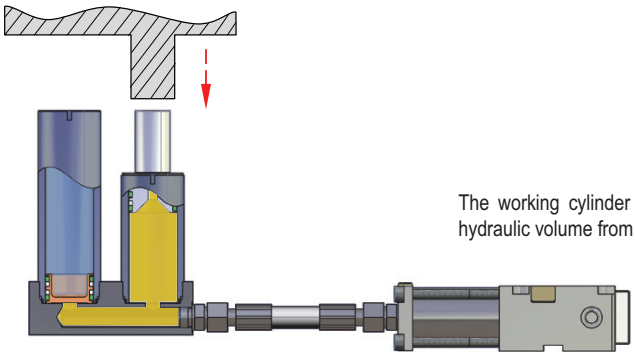

The working cylinder is made to work by the movement of the press, moving the hydraulic volume from the drive unit to the working cam through the hoses.

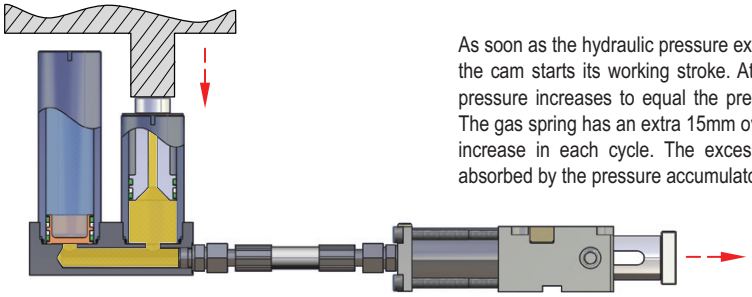

As soon as the hydraulic pressure exceeds the counterforce exerted by the gas spring, the cam starts its working stroke. At the end of the cam working stroke, the system pressure increases to equal the pressure of the nitrogen gas pressure accumulator. The gas spring has an extra 15mm overstroke capacity to ensure an identical pressure increase in each cycle. The excess volume of oil produced by the overstroke is absorbed by the pressure accumulator.

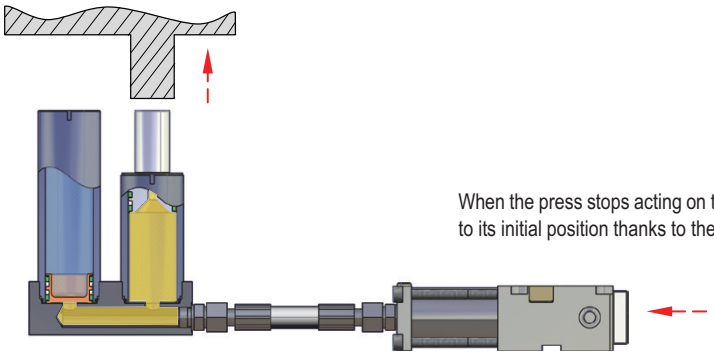

When the press stops acting on the working gas spring of the drive unit, the cam returns to its initial position thanks to the recoil of the gas spring.

Safety function

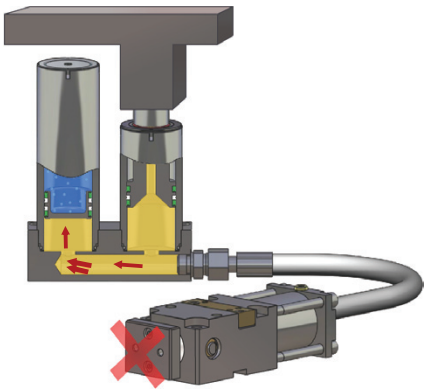

In the event that the cam working stroke is partially or completely hindered, the accumulator can completely absorb the displaced oil thereby avoiding any risk of breakage or explosion.

Oil refilling instructions

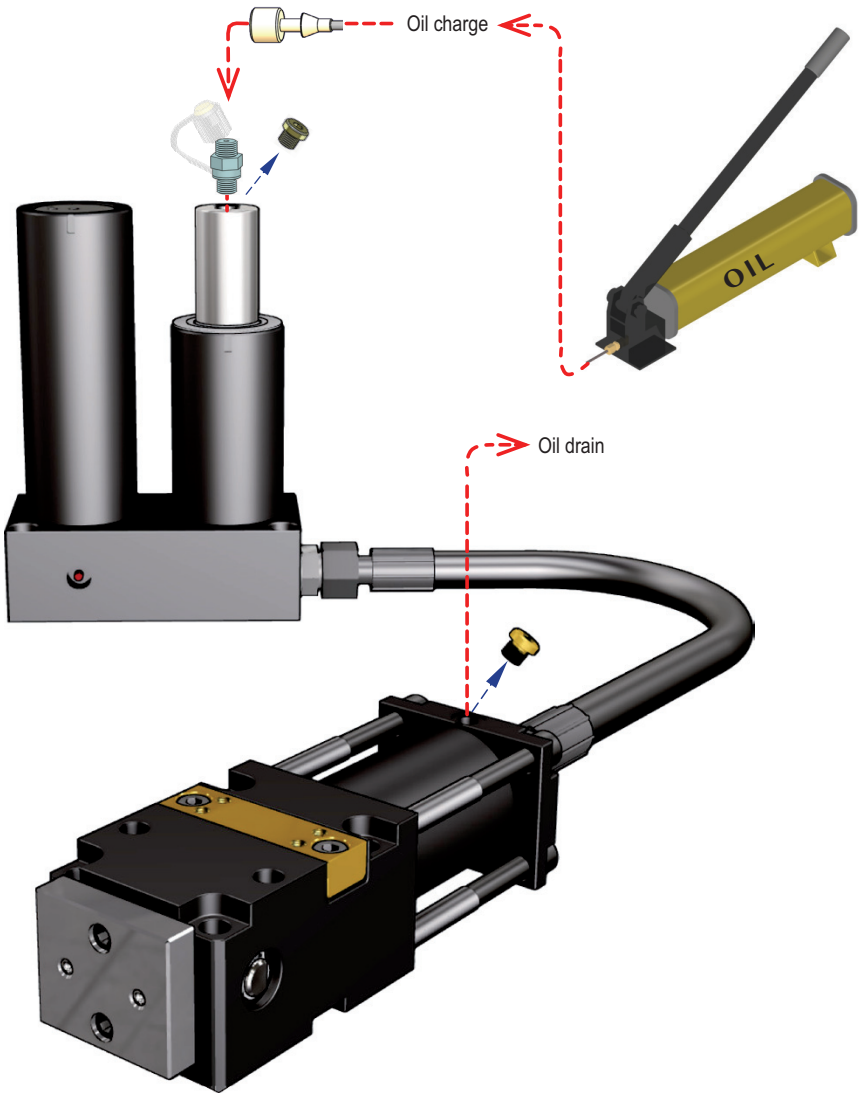

Installation instructions

Once the assembly of all components has been completed, proceed as follows:

1 - Remove the cap from the oil filler hole
2 - Remove the cap from the oil drain hole
3 - Connect the oil pump minimess hose terminal to the oil filling hole
4 - Charge with oil by making it circulate throughout the system, until it is free of air bubbles, by purging such air bubbles through the outlet.
5 - Remove the oil filler items and close the oil charging and oil draining holes with the corresponding safety screws.
6 - The system is now ready for operation

How to order

TPCH 3000 x **50**

Code	TPCH 3000 TPCH 7500 TPCH 12000	Stroke	25mm 50mm 63mm(only TPCH 12000) 80mm(only TPCH 3000 & TPCH 7500)

Alternative driver

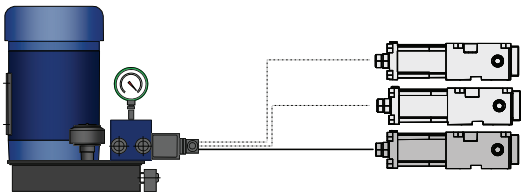

As an alternative to normal operation in presses, working cams also can be made to work by means of a hydraulic group that sends pressurized oil to the cams.

CONNECTION HOSE
TFRR

How to order

TFRR.01 - 500

Code — Length

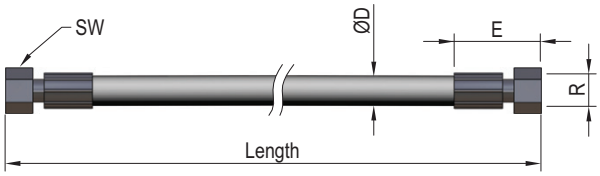

Code	TPCH model	ØD mm	E mm	R	SW mm
TFRR.01	TPCH 3000	21,2	≈ 63,5	M24x1,5	30
TFRR.02	TPCH 7500	28,2	≈ 76,5	M30x2	36
TFRR.03	TPCH 12000	36,1	≈ 100,5	M36x2	41

CONNECTION HOSE
TFRC

How to order

TFRC.03 - 750

Code — Length

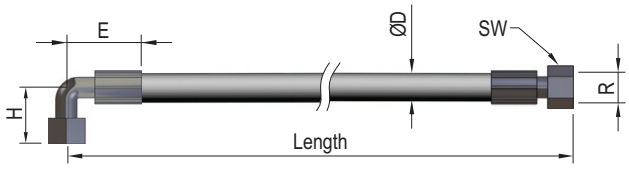

Code	TPCH model	ØD mm	H mm	E mm	R	SW mm
TFRC.01	TPCH 3000	21,2	≈ 45	≈ 69	M24x1,5	30
TFRC.02	TPCH 7500	28,2	≈ 55	≈ 94	M30x2	36
TFRC.03	TPCH 12000	36,1	≈ 67	≈ 128	M36x2	41

CONNECTION HOSE
TFCC

How to order

TFCC.02 - 325

Code — Length

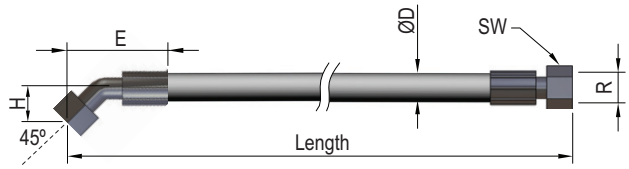

Code	TPCH model	ØD mm	H mm	E mm	R	SW mm
TFCC.01	TPCH 3000	21,2	≈ 29	≈ 85	M24x1,5	30
TFCC.02	TPCH 7500	28,2	≈ 36	≈ 125	M30x2	36
TFCC.03	TPCH 12000	36,1	≈ 40	≈ 130	M36x2	41

CONNECTION RACORD
RMTF

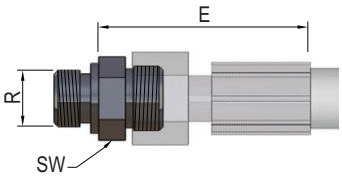

Code	TPCH model	E mm	R	SW mm
RMTF.01	TPCH 3000	≈ 85	1/2"	27
RMTF.02	TPCH 7500	≈ 90	3/4"	32
RMTF.03	TPCH 12000	≈ 108	1"	41

TF HOSE

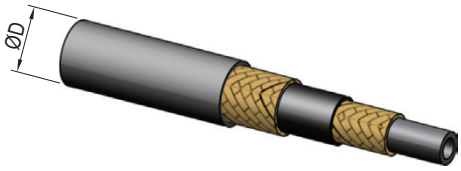

Code	TPCH model	ØD mm	Min. curvature radius mm	Working pressure Bar	Breakage pressure Bar
TF... .01	TPCH 3000	21,2	90	345	1380
TF... .02	TPCH 7500	28,2	160	280	1120
TF... .03	TPCH 12000	36,1	210	200	950

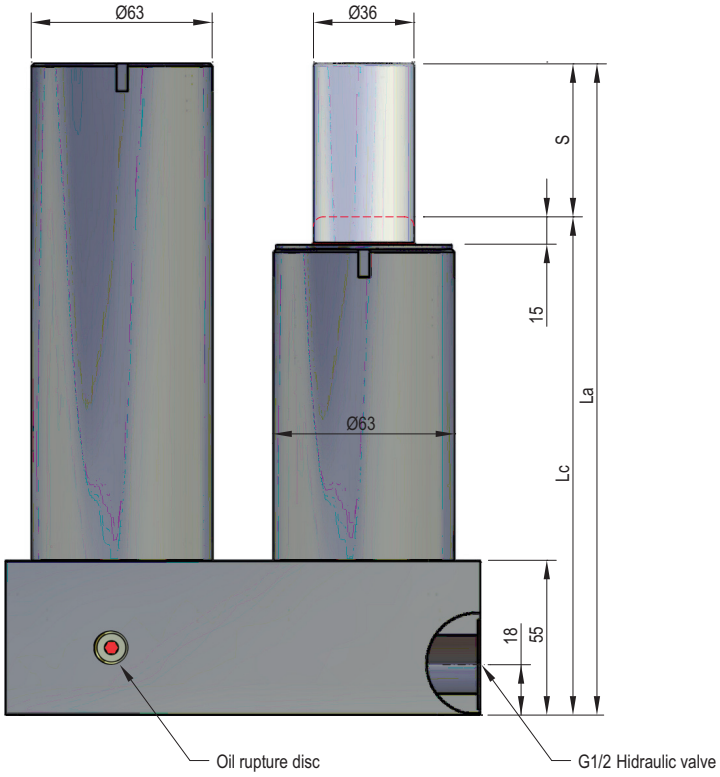

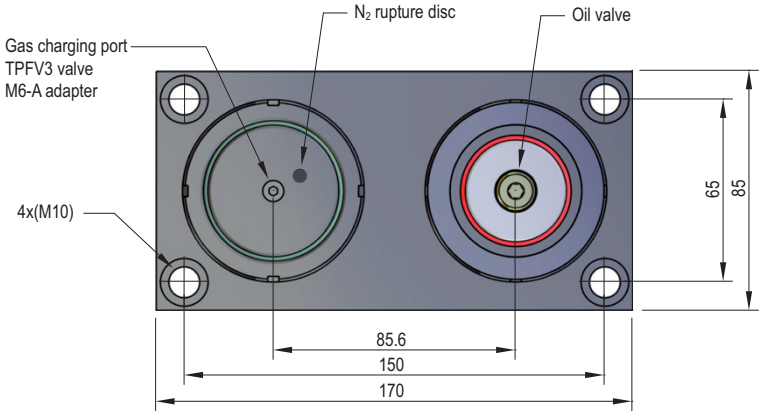

Code	Smax mm	La mm	Lc mm	Max. operation force	Charging N_2 pressure		Max. working specifications		Max. working temperature
					Min.	Max.	Velocity	Strokes / min	
TPCH 3000x25	25	183	158	3000 daN	50 Bar	150 Bar	20 m/min	40 spm	60 ºC
TPCH 3000x50	50	233	183					30 spm	
TPCH 3000x80	80	293	213					20 spm	

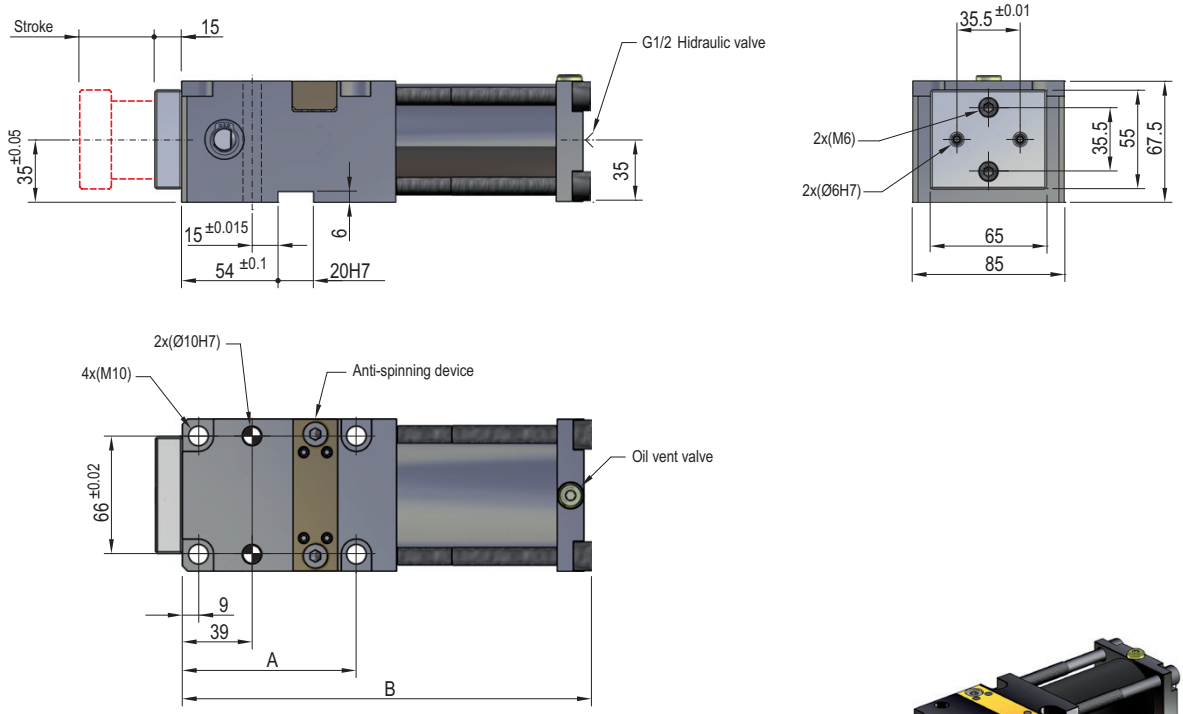

Code	Smax mm	A mm	B mm	Max. punching force	Gas spring force		Gas spring model	Max. working specifications		Application
					Initial	Final		Velocity	Strokes / min	
TPCH 3000x25	25	83,5	187	3000 daN	200 daN	≈ 270 daN	TPK 25x25 YW	20 m/min	40 spm	Round and shaped
TPCH 3000x50	50	97,5	225				TPK 25x50 YW		30 spm	
TPCH 3000x80	80	125,5	285				TPK 25x80 YW		20 spm	

Working angle

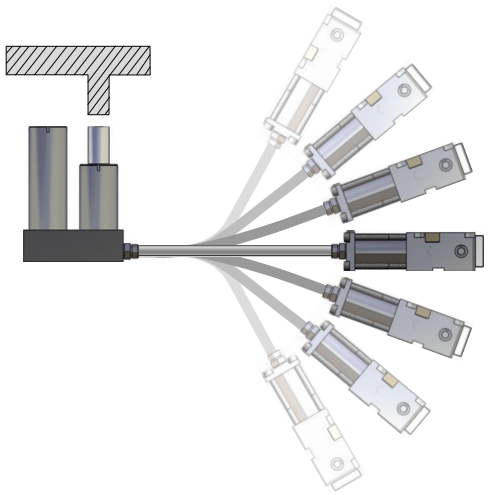

The working cam can work freely in space, at any angle and in any position.

Working cam / drive unit cylinder stroke ratio

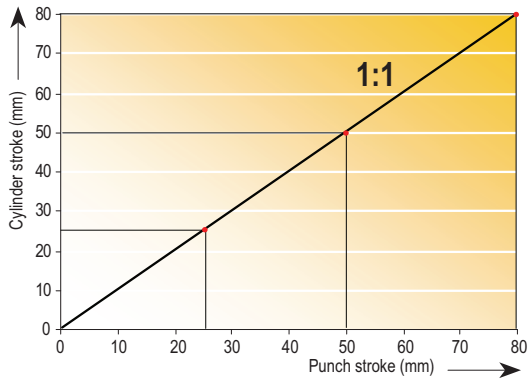

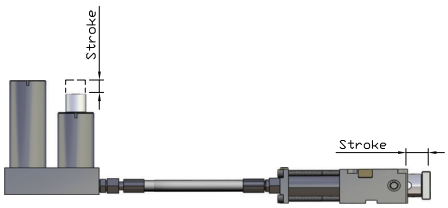

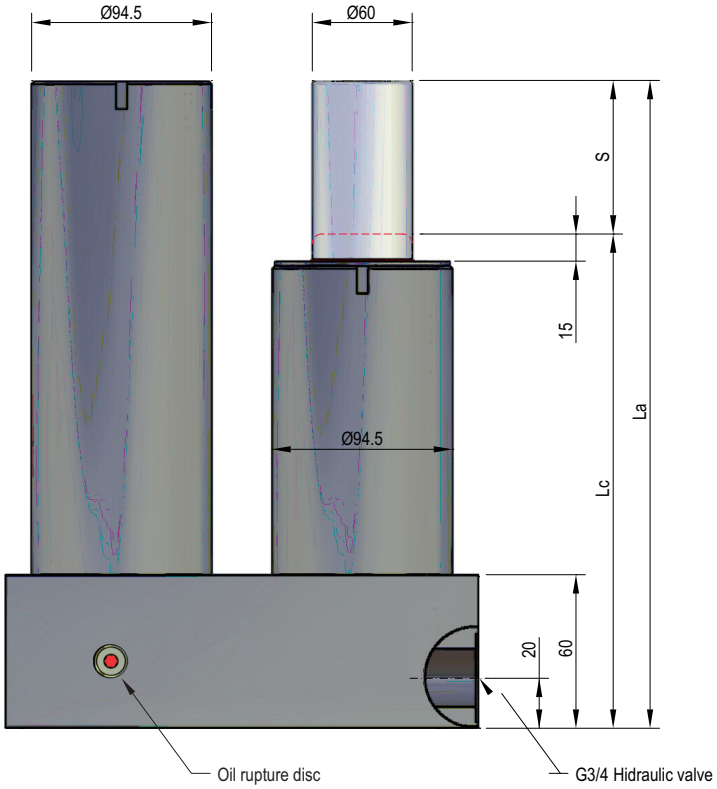

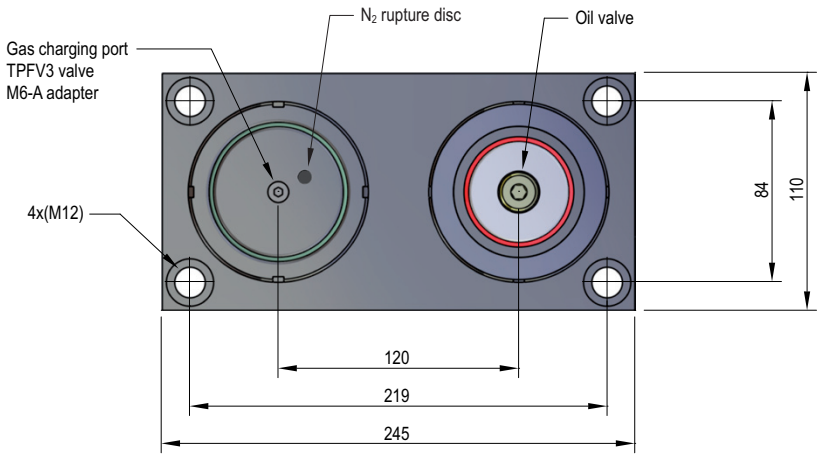

Code	Smax mm	La mm	Lc mm	Max. operation force	Charging N_2 pressure		Max. working specifications		Max. working temperature
					Min.	Max.	Velocity	Strokes / min	
TPCH 7500x25	25	205	180	7500 daN	50 Bar	150 Bar	20 m/min	40 spm	60 ºC
TPCH 7500x50	50	255	205					30 spm	
TPCH 7500x80	80	315	235					20 spm	

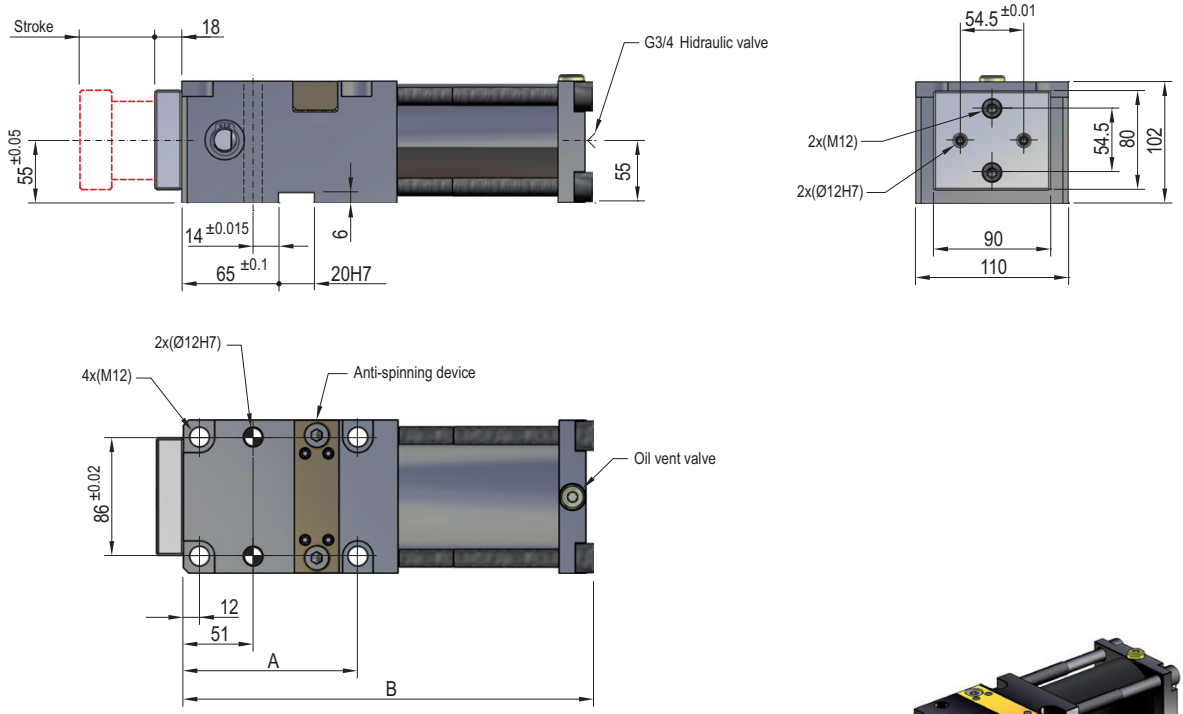

Code	Smax mm	A mm	B mm	Max. punching force	Gas spring force		Gas spring model	Max. working specifications		Application
					Initial	Final		Velocity	Strokes / min	
TPCH 7500x25	25	110	230	7500 daN	600 daN	≈ 860 daN	TPK 600x25	20 m/min	40 spm	Round and shaped
TPCH 7500x50	50	110	255				TPK 600x50		30 spm	
TPCH 7500x80	80	140	315				TPK 600x80		20 spm	

Working angle

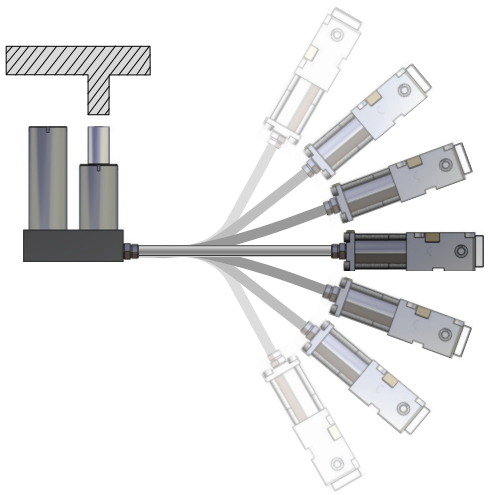

The working cam can work freely in space, at any angle and in any position.

Working cam / drive unit cylinder stroke ratio

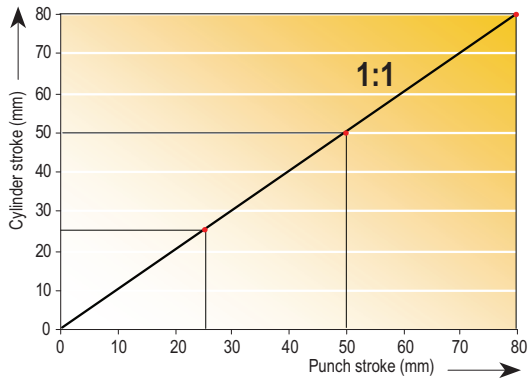

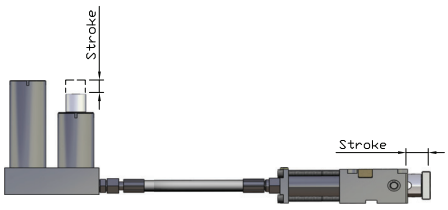

TPGAS 07 01-2018

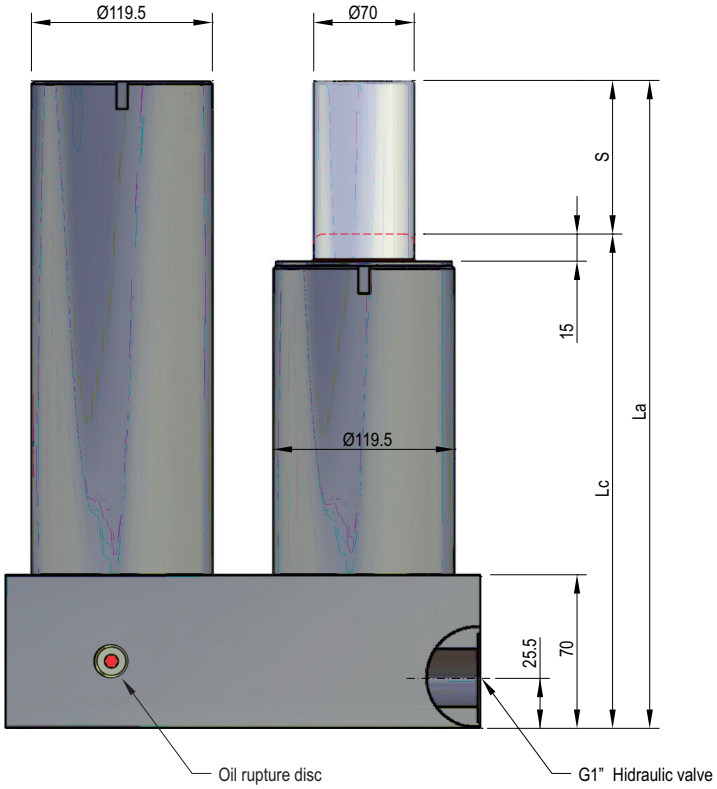

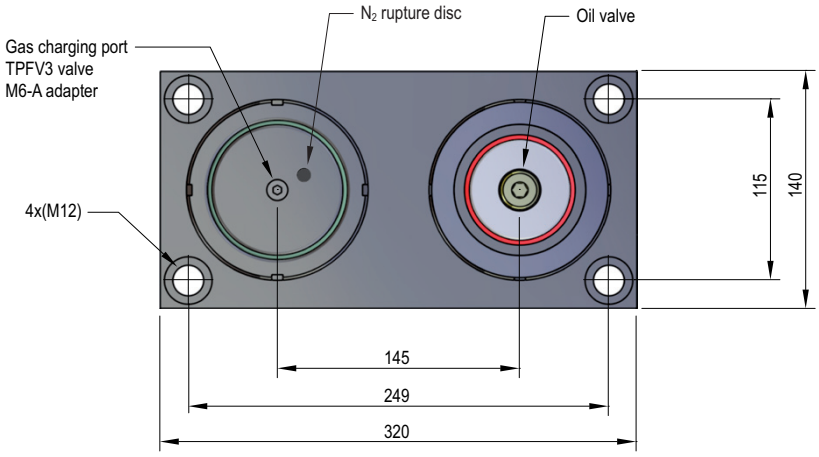

Code	Smax mm	La mm	Lc mm	Max. operation force	Charging N_2 pressure		Max. working specifications		Max. working temperature
					Min.	Max.	Velocity	Strokes / min	
TPCH 12000x25	25	216	191	12000 daN	50 Bar	150 Bar	20 m/min	40 spm	60 ºC
TPCH 12000x50	50	266	216					30 spm	
TPCH 12000x63	63	292	229					20 spm	

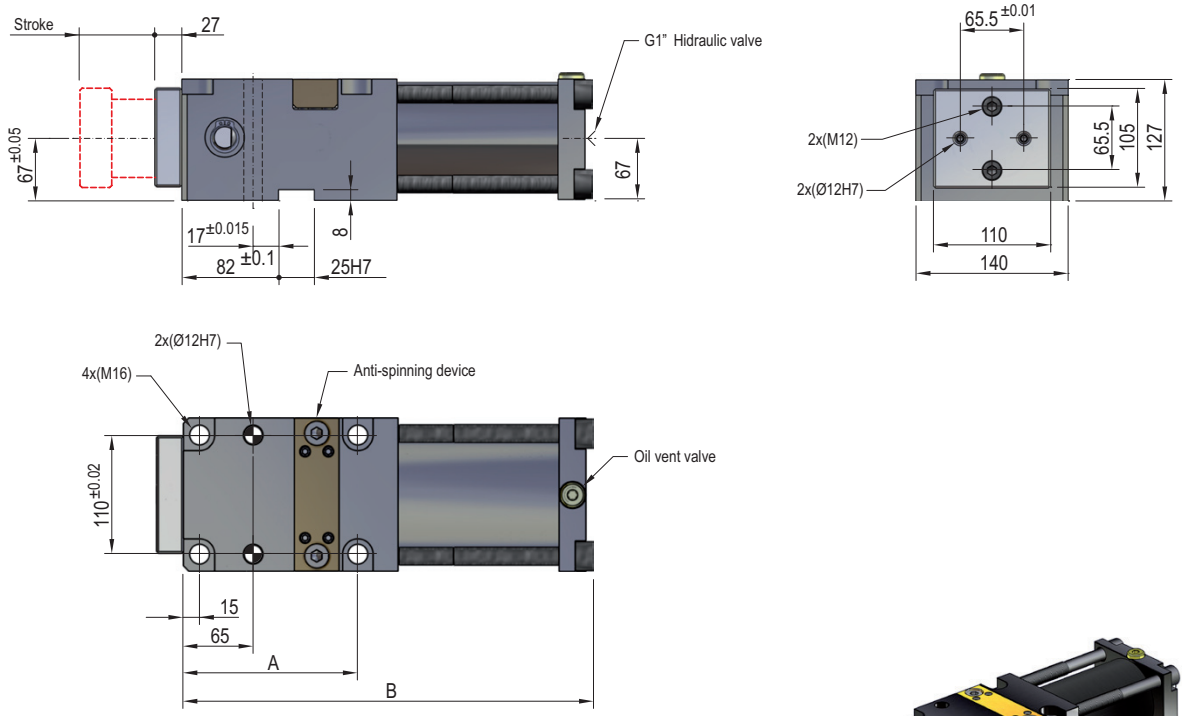

Code	Smax mm	A mm	B mm	Max. punching force	Gas spring force		Gas spring model	Max. working specifications		Application
					Initial	Final		Velocity	Strokes / min	
TPCH 12000x25	25	132	263	12000 daN	750 daN	≈ 1190 daN	MICRO 45x25	20 m/min	40 spm	Round and shaped
TPCH 12000x50	50	132	288				MICRO 45x50		30 spm	
TPCH 12000x63	63	132	314				MICRO 45x63		20 spm	

Working angle

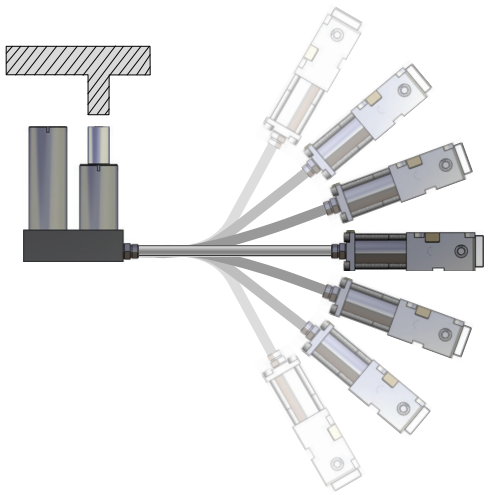

The working cam can work freely in space, at any angle and in any position.

Working cam / drive unit cylinder stroke ratio

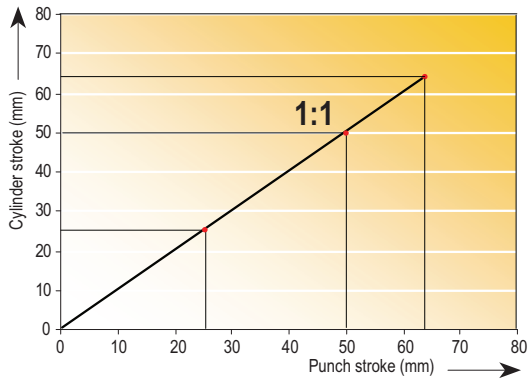

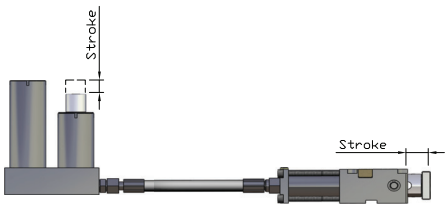

TPGAS 07 01-2018

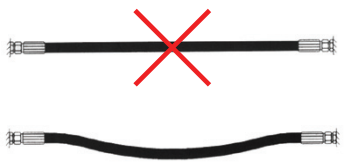

The length of the hose should have a certain amount of slack (10 or 20% excess)

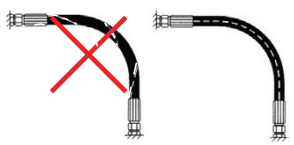

Make sure the hose is not twisted during the installation process.

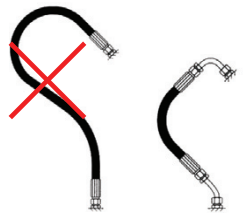

Select the appropriate fittings so that the hoses are not forced. A proper use of fittings prevents excessive hose length

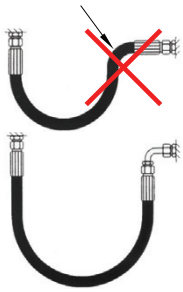

The installation process must comply with the minimum hose curvature radius.

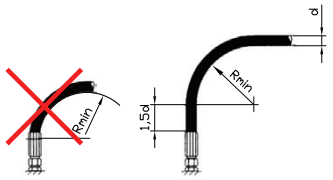

Before starting a curvature, a minimum straight length must be respected to avoid damage to the joint.

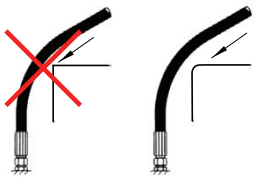

External mechanical influence on the hose should be avoided, even the rubbing against a nearby element. It is recommendable to use clamps for this process

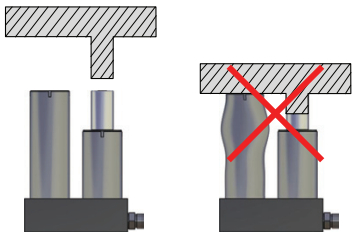

To avoid accidents or serious damage to the pressure accumulator, the press ram should have the necessary adequate dimensions.

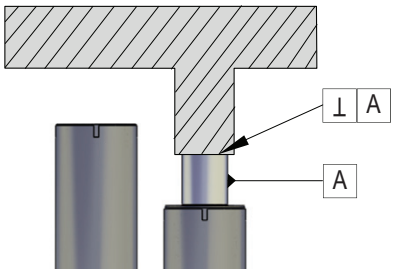

The working gas spring should be completely perpendicular to the working surface

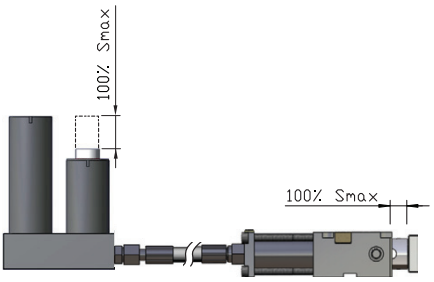

All models are prepared to work at 100% of their specified stroke. There is also a 15mm safety reserve stroke.

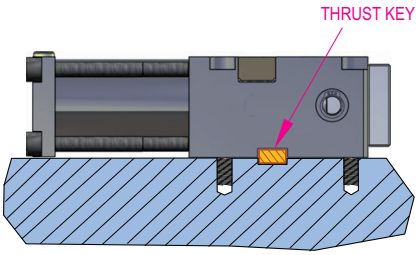

It is necessary to choose conveniently the length of fixing screws. All working cams have a groove for the mounting of a positioning pin.